These drawings are the property of TRL LTD. and are being provided to NHTSA under agreement for the purpose of evaluation. Except for review and comment by the public, these drawings shall not be copied or used for any other purpose.

FOR DISCUSSION PURPOSES ONLY
- DO NOT MANUFACTURE!

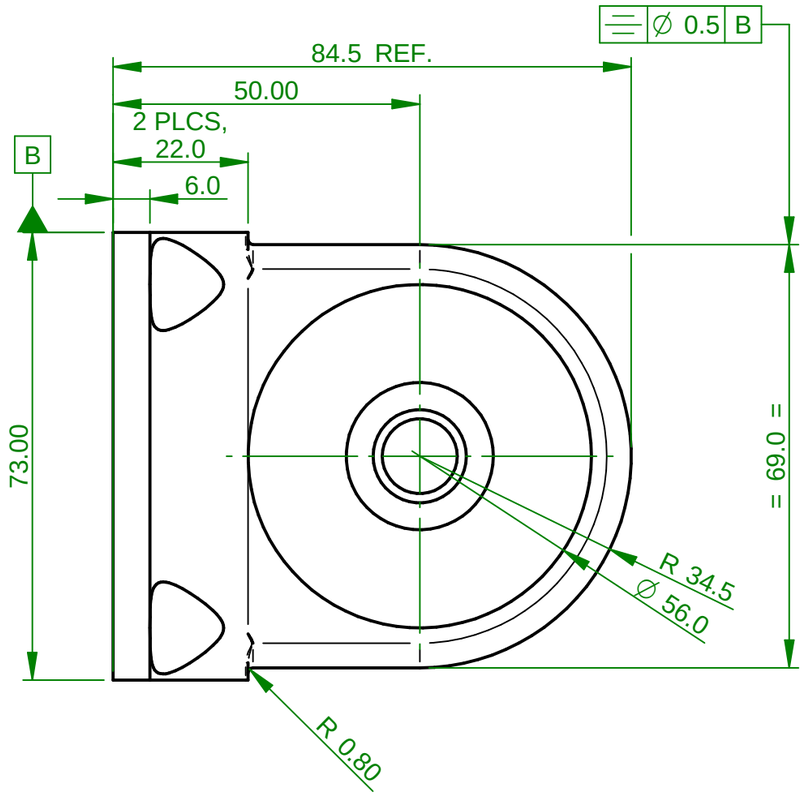

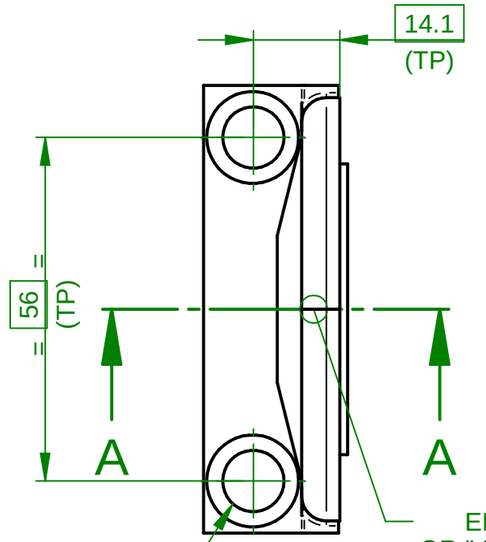

ENGRAVE 0.4 WIDE LINE
OR 'V' GROOVE WITNESS MARK
AT THIS POSITION ON C/LINE.

2 HOLES, THRO'
DRILL Ø10 +Ø0/-Ø0.5
⌴Ø15 +Ø0/-Ø0.5
SPACED AS SHOWN
⌖ Ø 0.2

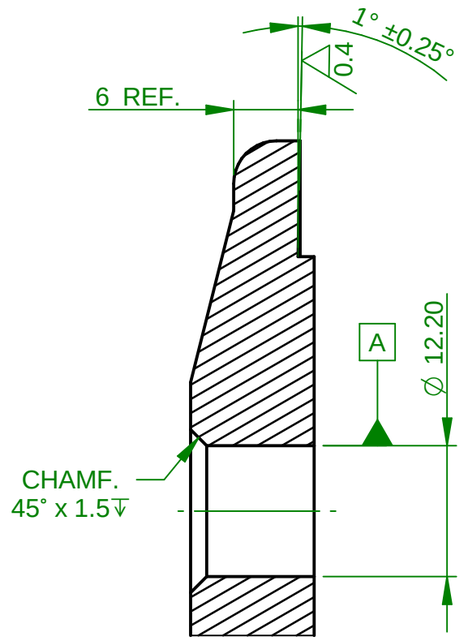

SECTION A-A

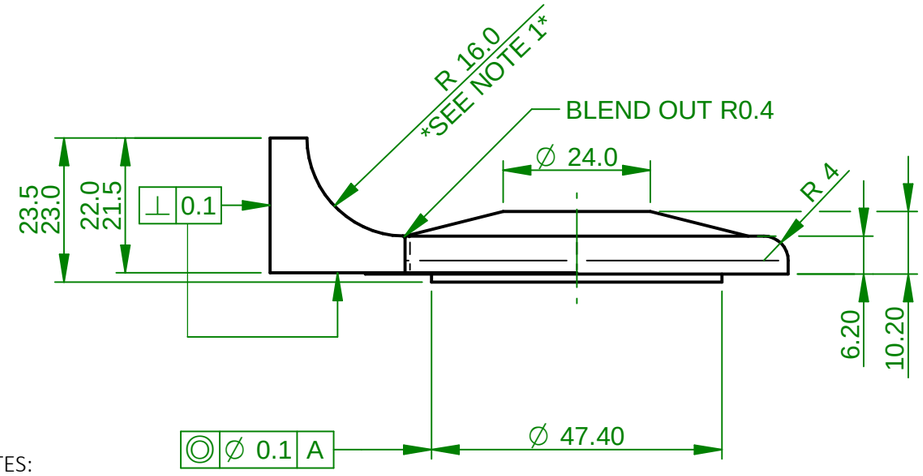

NOTES:

1. TP = TRUE POSITION.

2. IF IN DOUBT CONTACT THE DRAWING PROVIDER.

FOR DISCUSSION PURPOSES ONLY
- DO NOT MANUFACTURE!

© 2018 COPYRIGHT TRL LTD. ALL RIGHTS RESERVED. DRAWING BASED ON BS8888.UNLESS OTHERWISE SPECIFIED DIMENSIONS ARE IN MILLIMETERS. REMOVE ALL BURRS AND SHARP EDGES.

GENERAL TOLERANCES
UNLESS STATED OTHERWISE:
2 Dec. Places : ±0.1 mm
1 Dec. Places : ±0.5 mm
0 - 1000 : ±1 mm
1000 - 4000 : ±2 mm
4000 + : ±3 mm

	NAME	DATE
DRAWN	Y	13/09/16
CHECKED	Y	
APPROVED	Y	

TRL

TITLE	CLUTCH PLATE OUTER	
DWG NO	N1212-02-S04-008	REV H
MATERIAL	BS970 - 080M40 (En8) STEEL (OR EVUIVALENT)	
FINISH	BRIGHT ZINC PLATED	
PROJECT	UPPER LEGFORM	
SIZE	A3	SHEET 1 OF 1

These drawings are the property of TRL LTD. and are being provided to NHTSA under agreement for the purpose of evaluation. Except for review and comment by the public, these drawings shall not be copied or used for any other purpose.