These drawings are the property of TRL LTD. and are being provided to NHTSA under agreement for the purpose of evaluation. Except for review and comment by the public, these drawings shall not be copied or used for any other purpose.

FOR DISCUSSION PURPOSES ONLY
- DO NOT MANUFACTURE!

No.	Qty.	Drawing No.	Rev.	Description
1	1	HARDWARE	-	NUT ISO 4032 - M8
2	1	HARDWARE	-	M8 WASHER
3	1	N1212-02-S05-001	G	LOAD TRANSDUCER ADAPTOR
4	1	N1212-02-S05-002	E	LOAD TRANSDUCER STUD
5	1	N1212-02-S05-004	G	SLIDING WASHER

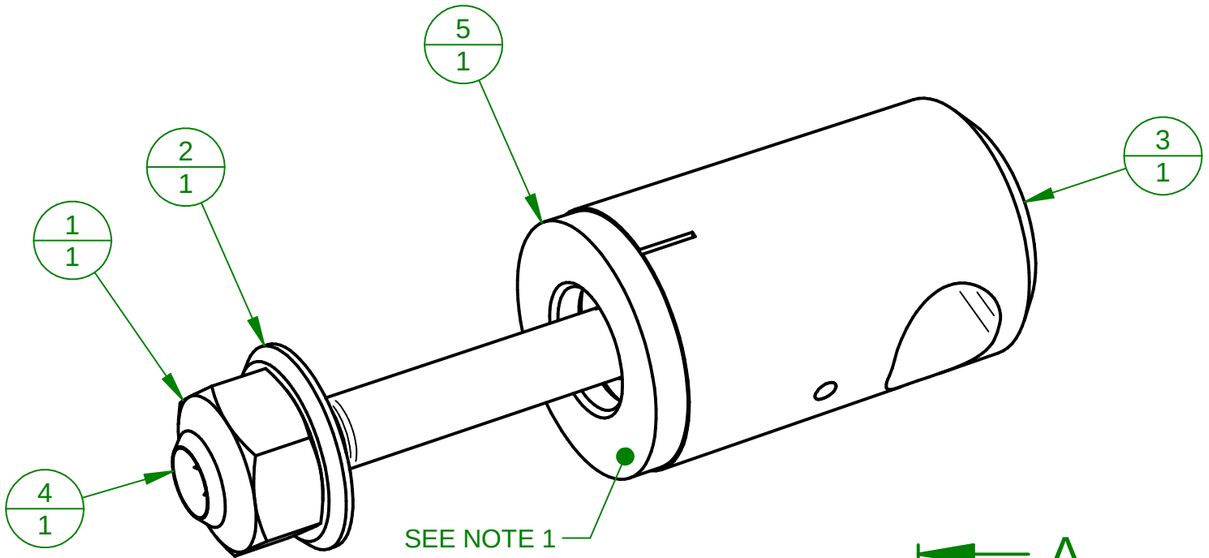

NOTES:

1. ACCEPTABLE TO BE MADE FROM MORE THAN 1 WASHER.

2. IF IN DOUBT CONTACT THE DRAWING PROVIDER.

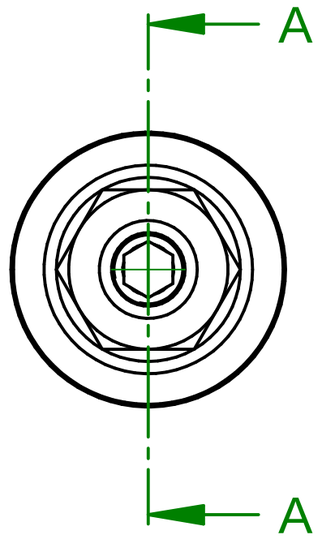

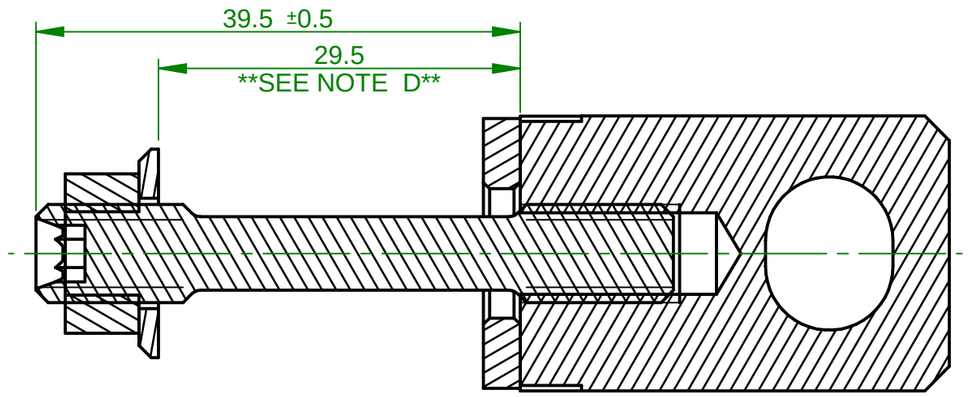

SECTION A-A

ASSEMBLY PROCEDURE:

A. LAP CONTACT SURFACE OF ITEM 3, BOTH SIDES OF ITEMS 1,2 AND 5*.

B. CLEAN AND DEGREASE ALL SURFACES.

C. APPLY THREADLOCK AS DIRECTED TO THE TAPPED HOLE. SCREW IN THE STUD TO FULL DEPTH AND REMOVE ALL SURPLUS THREADLOCK FROM THE EXTERIOR, PARTICULARLY THE MATING SURFACES OF ITEM 3.

D. USING AN ALIGNMENT SPACER, FIT THE NUT & WASHER TO GIVE THE CORRECT PROTRUSION LENGTH. NIP THE NUT LIGHTLY.

E. UNDO NUT TO REMOVE ANY SURPLUS THREADLOCK FROM SURFACES AND RE-CLAMP. FOLLOW THREADLOCK SUPPLIER'S DIRECTIONS.

F. WHEN SET, REMOVE ALIGNMENT SPACER.

G. LOCATE SLIDING WASHER/S INSIDE NUT AND LIGHTLY SMEAR ALL LAPPED SURFACES WITH LIGHT GREASE.

H. IDENTIFY STUD HEX END.

*IF ITEM IS BROUGHT IN THEN LAPPING MAY NOT BE REQUIRED.

FOR DISCUSSION PURPOSES ONLY
- DO NOT MANUFACTURE!

© 2018 COPYRIGHT TRL LTD. ALL RIGHTS RESERVED. DRAWING BASED ON BS8888.UNLESS OTHERWISE SPECIFIED DIMENSIONS ARE IN MILLIMETERS. REMOVE ALL BURRS AND SHARP EDGES.

	NAME	DATE
DRAWN	Y	25/08/16
CHECKED	Y	
APPROVED	Y	

TITLE: LOAD TRANSDUCER STUD/ADAPTOR ASSEMBLY

DWG NO: N1212-02-G01-S05

REV: F

MATERIAL: SEE BOM

FINISH: CLEAN

PROJECT: UPPER LEGFORM

SIZE: A3

SHEET: 1 OF 1

These drawings are the property of TRL LTD. and are being provided to NHTSA under agreement for the purpose of evaluation. Except for review and comment by the public, these drawings shall not be copied or used for any other purpose.