These drawings are the property of TRL LTD. and are being provided to NHTSA under agreement for the purpose of evaluation. Except for review and comment by the public, these drawings shall not be copied or used for any other purpose.

FOR DISCUSSION PURPOSES ONLY - DO NOT MANUFACTURE!

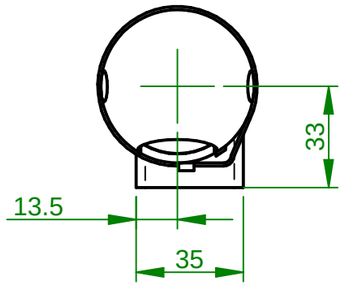

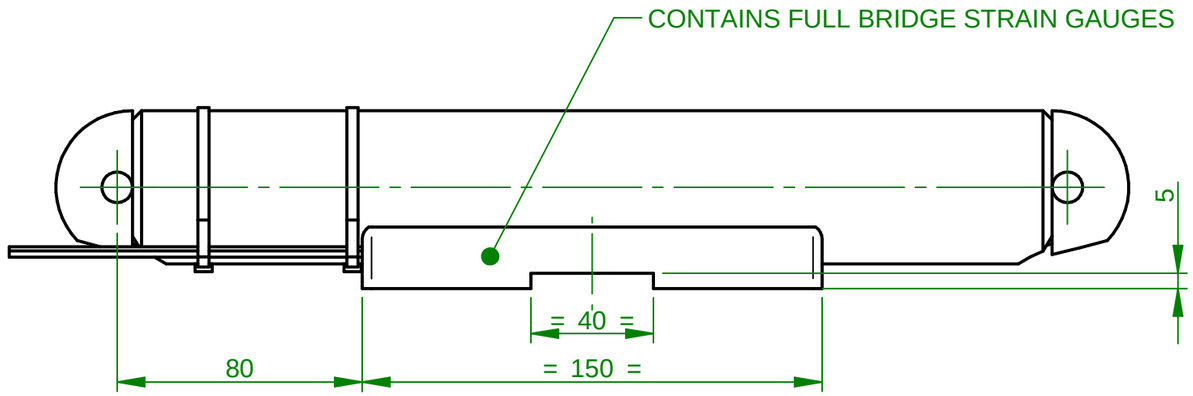

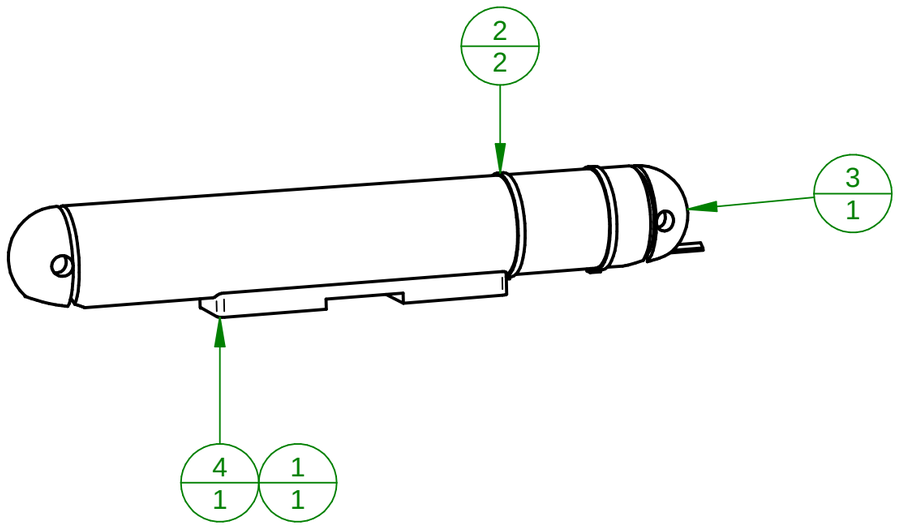

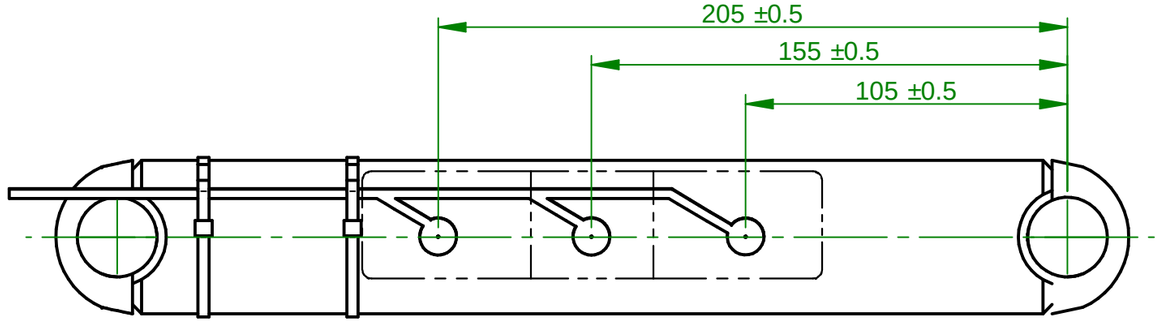

ITEM 4 OMITTED FROM THIS VIEW TO SHOW STRAIN GAUGE LOCATIONS.

NOTES:

1. IF IN DOUBT PLEASE CONTACT THE DRAWING PROVIDER.

No.	Qty.	Drawing No.	Rev.	Description
1	1	HARDWARE	-	SCREENED STRAIN GAUGE CABLE
2	2	HARDWARE	-	CABLE TIE, 3.5mm x 290mm LONG
3	1	N1212-02-S02-001	E	FRONT MEMBER TUBE & CAP
4	1	N1212-02-S02-012	A	STRAIN GAUGES MOULD

These drawings are the property of TRL LTD. and are being provided to NHTSA under agreement for the purpose of evaluation. Except for review and comment by the public, these drawings shall not be copied or used for any other purpose.

FOR DISCUSSION PURPOSES ONLY - DO NOT MANUFACTURE!

© 2018 COPYRIGHT TRL LTD. ALL RIGHTS RESERVED. DRAWING BASED ON BS8888.UNLESS OTHERWISE SPECIFIED DIMENSIONS ARE IN MILLIMETERS. REMOVE ALL BURRS AND SHARP EDGES.

	NAME	DATE
DRAWN	Y	25/08/16
CHECKED	Y	
APPROVED	Y	

TRL

TITLE: FRONT MEMBER ASSEMBLY

DWG NO: N1212-00-G01-S02

REV: M

MATERIAL: SEE BOM

FINISH: -

PROJECT: UPPER LEGFORM

SIZE: A3

SHEET: 1 OF 1