These drawings are the property of TRL LTD. and are being provided to NHTSA under agreement for the purpose of evaluation. Except for review and comment by the public, these drawings shall not be copied or used for any other purpose.

FOR DISCUSSION PURPOSES ONLY
- DO NOT MANUFACTURE!

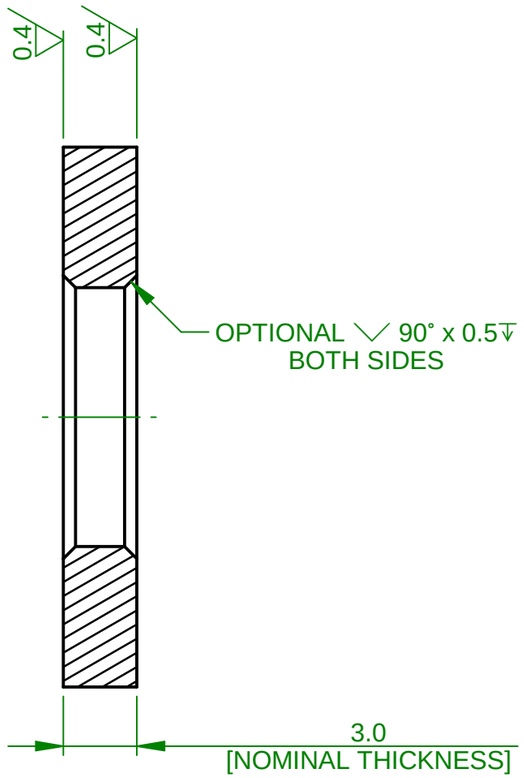

SECTION A-A

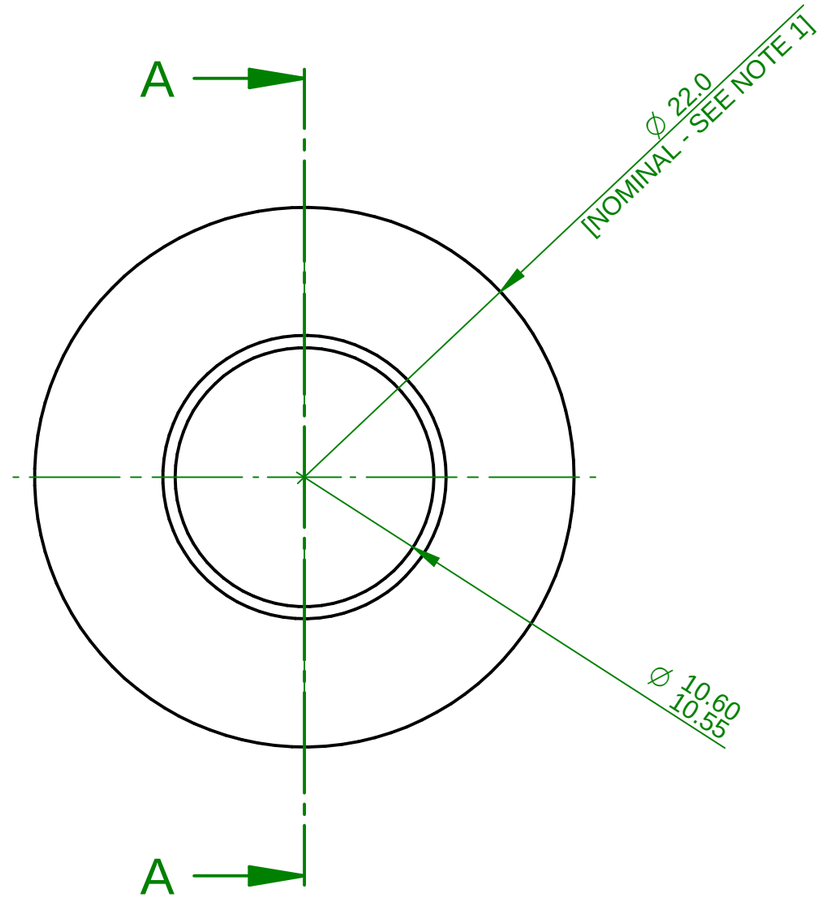

NOTES:

1. OUTSIDE DIAMETER NOT LESS THAN OUTSIDE DIAMETER OF LOAD TRANSDUCER MOUNTING SURFACES.

2. BRIGHT ZINC PLATED FINISH. AS REQUIRED LAP FLAT SURFACES LATER.

3. IF IN DOUBT CONTACT THE DRAWING PROVIDER.

GENERAL TOLERANCES UNLESS STATED OTHERWISE:

2 Dec. Places	: ±0.1 mm
1 Dec. Places	: ±0.5 mm
0 - 1000	: ±1 mm
1000 - 4000	: ±2 mm
4000 +	: ±3 mm

These drawings are the property of TRL LTD. and are being provided to NHTSA under agreement for the purpose of evaluation. Except for review and comment by the public, these drawings shall not be copied or used for any other purpose.

FOR DISCUSSION PURPOSES ONLY
- DO NOT MANUFACTURE!

© 2018 COPYRIGHT TRL LTD. ALL RIGHTS RESERVED. DRAWING BASED ON BS8888.UNLESS OTHERWISE SPECIFIED DIMENSIONS ARE IN MILLIMETERS. REMOVE ALL BURRS AND SHARP EDGES.

	NAME	DATE
DRAWN	Y	14/09/16
CHECKED	Y	
APPROVED	Y	

TRL

TITLE	SLIDING WASHER
DWG NO	N1212-02-S05-004
REV	G
MATERIAL	BS970 - 070M20 STEEL (OR EQUIVALENT)
FINISH	**SEE NOTE 2**
PROJECT	UPPER LEGFORM
SIZE	A3
SHEET	1 OF 1