These drawings are the property of TRL LTD. and are being provided to NHTSA under agreement for the purpose of evaluation. Except for review and comment by the public, these drawings shall not be copied or used for any other purpose.

FOR DISCUSSION PURPOSES ONLY
- DO NOT MANUFACTURE!

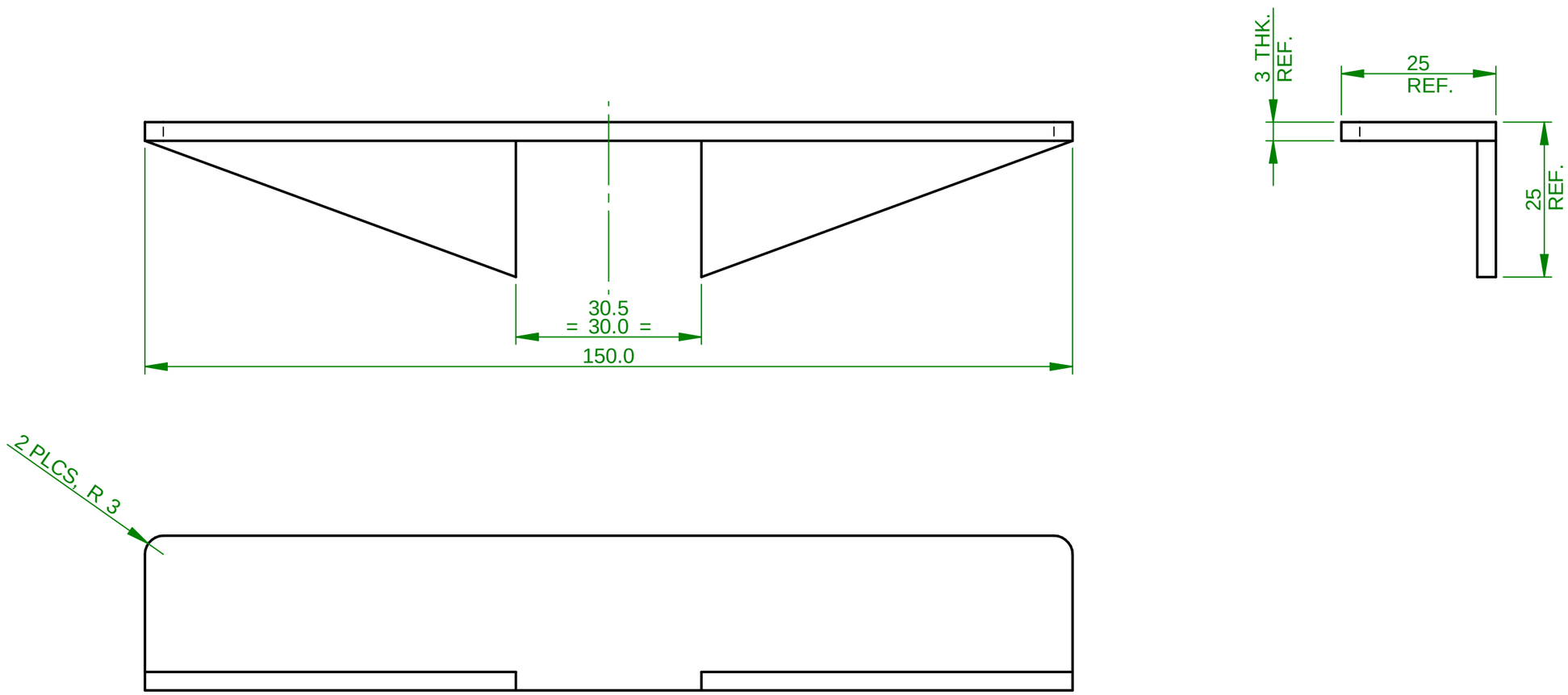

FOR DISCUSSION PURPOSES ONLY
- DO NOT MANUFACTURE!

© 2018 COPYRIGHT TRL LTD. ALL RIGHTS RESERVED. DRAWING BASED ON BS8888.UNLESS OTHERWISE SPECIFIED DIMENSIONS ARE IN MILLIMETERS. REMOVE ALL BURRS AND SHARP EDGES.

GENERAL TOLERANCES
UNLESS STATED OTHERWISE:

2 Dec. Places	: ±0.1 mm
1 Dec. Places	: ±0.5 mm
0 - 1000	: ±1 mm
1000 - 4000	: ±2 mm
4000 +	: ±3 mm

	NAME	DATE
DRAWN	Y	14/09/16
CHECKED	Y	
APPROVED	Y	

TITLE: WEIGHT SUPPORT BRACKET

DWG NO: N1212-02-S01-006

REV: D

MATERIAL: SEE NOTE 1

FINISH: CLEAN

PROJECT: UPPER LEGFORM

SIZE: A3

SHEET: 1 OF 1

These drawings are the property of TRL LTD. and are being provided to NHTSA under agreement for the purpose of evaluation. Except for review and comment by the public, these drawings shall not be copied or used for any other purpose.

NOTES:

1. MANUFACTURED FROM EQUAL ANGLE (25x25x3) BS970 - 070M20 STEEL (OR EQUIVALENT).

2. IF IN DOUBT CONTACT THE DRAWING PROVIDER.