These drawings are the property of TRL LTD. and are being provided to NHTSA under agreement for the purpose of evaluation. Except for review and comment by the public, these drawings shall not be copied or used for any other purpose.

FOR DISCUSSION PURPOSES ONLY
- DO NOT MANUFACTURE!

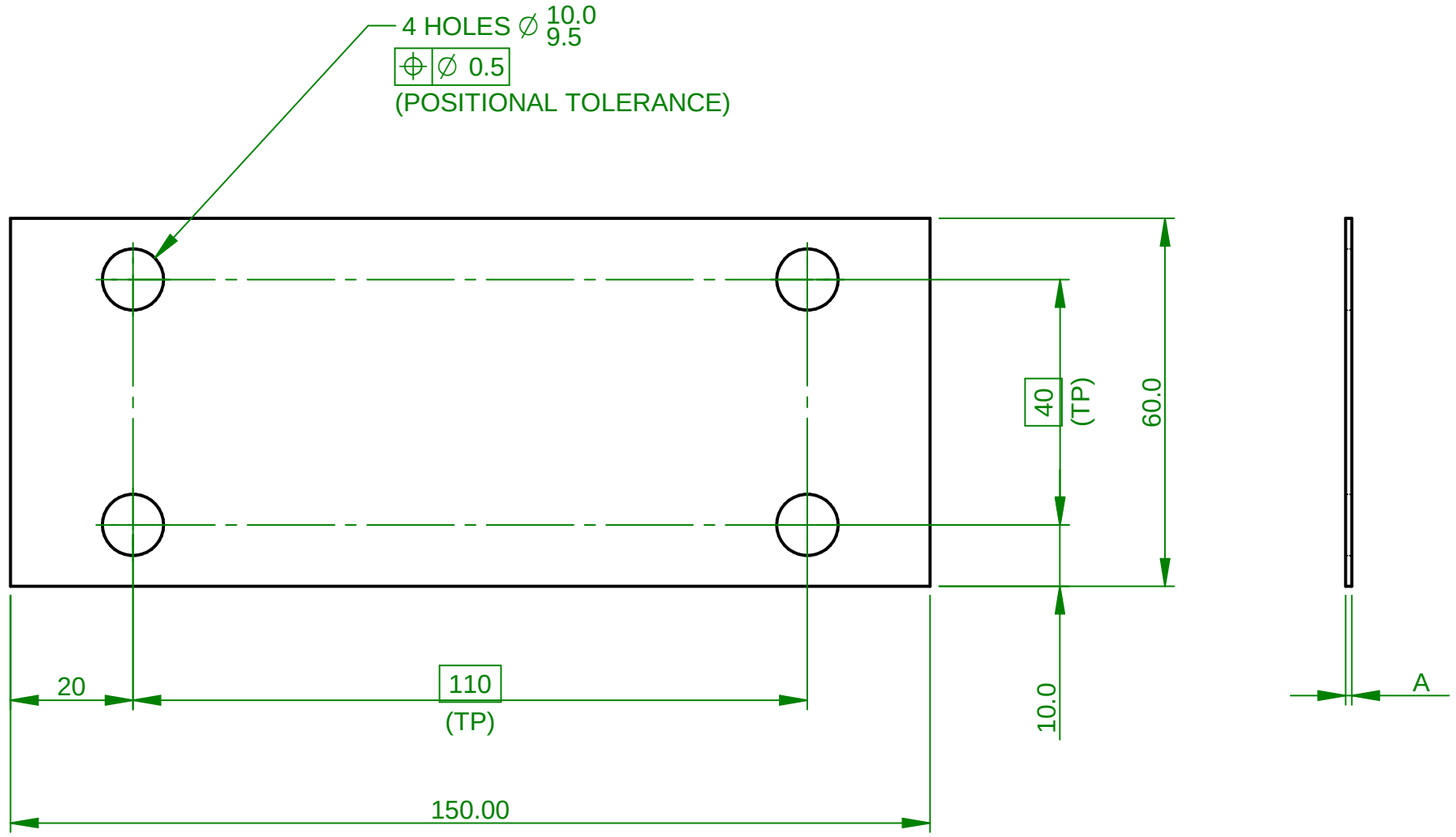

(TP) = TRUE POSITION

FOR DISCUSSION PURPOSES ONLY
- DO NOT MANUFACTURE!

© 2018 COPYRIGHT TRL LTD. ALL RIGHTS RESERVED. DRAWING BASED ON BS8888.UNLESS OTHERWISE SPECIFIED DIMENSIONS ARE IN MILLIMETERS. REMOVE ALL BURRS AND SHARP EDGES.

	NAME	DATE
DRAWN	Y	14/09/16
CHECKED	Y	
APPROVED	Y	

GENERAL TOLERANCES UNLESS STATED OTHERWISE:
2 Dec. Places : ±0.1 mm
1 Dec. Places : ±0.5 mm
0 - 1000 : ±1 mm
1000 - 4000 : ±2 mm
4000 + : ±3 mm

TITLE: LARGE WEIGHT

DWG NO: N1212-02-G01-011

REV: D

MATERIAL: STEEL TO BS970 - 070M20 (OR EQUIVALENT)

FINISH: ZINC PLATE AND PASSIVATE

PROJECT: UPPER LEGFORM

SIZE: A3

SHEET: 1 OF 1

NOTES:

1. IF IN DOUBT CONTACT THE DRAWING PROVIDER.

ITEM	THICKNESS A
011	1.0
012	2.0
013	3.0
014	5.0
015	10.0

These drawings are the property of TRL LTD. and are being provided to NHTSA under agreement for the purpose of evaluation. Except for review and comment by the public, these drawings shall not be copied or used for any other purpose.