These drawings are the property of TRL LTD. and are being provided to NHTSA under agreement for the purpose of evaluation. Except for review and comment by the public, these drawings shall not be copied or used for any other purpose.

FOR DISCUSSION PURPOSES ONLY
- DO NOT MANUFACTURE!

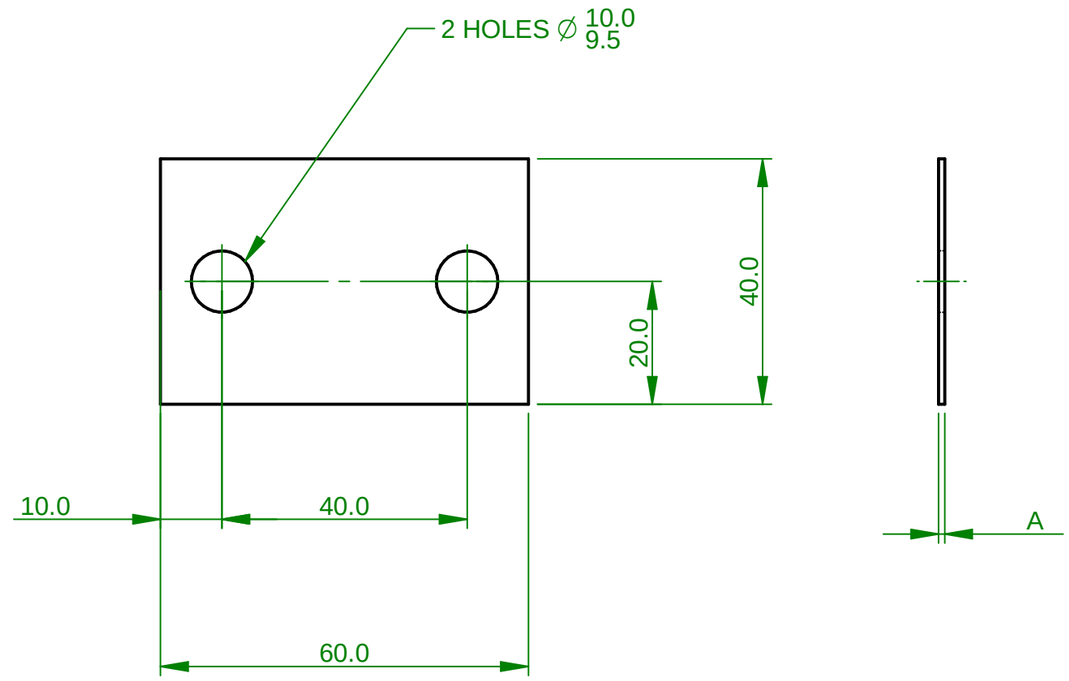

MATERIAL: STEEL TO BS970 - 070M20
(MILD STEEL)

FINISH: ZINC PLATE AND PASSIVE

FOR DISCUSSION PURPOSES ONLY
- DO NOT MANUFACTURE!

© 2018 COPYRIGHT TRL LTD. ALL RIGHTS RESERVED. DRAWING BASED ON BS8888.UNLESS OTHERWISE SPECIFIED DIMENSIONS ARE IN MILLIMETERS. REMOVE ALL BURRS AND SHARP EDGES.

GENERAL TOLERANCES UNLESS STATED OTHERWISE:

2 Dec. Places	: ±0.1 mm
1 Dec. Places	: ±0.5 mm
0 - 1000	: ±1 mm
1000 - 4000	: ±2 mm
4000 +	: ±3 mm

	NAME	DATE
DRAWN	Y	14/09/16
CHECKED	Y	
APPROVED	Y	

TRL

TITLE	SMALL WEIGHT
DWG NO	N1212-02-G01-016
REV	D
MATERIAL	STEEL TO BS970 - 070M20 (OR EQUIVALENT)
FINISH	ZINC PLATE AND PASSIVATE
PROJECT	UPPER LEGFORM
SIZE	A3
SHEET	1 OF 1

NOTES:

1. IF IN DOUBT CONTACT THE DRAWING PROVIDER.

ITEM	THICKNESS A
016	1.0
017	2.0

These drawings are the property of TRL LTD. and are being provided to NHTSA under agreement for the purpose of evaluation. Except for review and comment by the public, these drawings shall not be copied or used for any other purpose.