These drawings are the property of TRL LTD. and are being provided to NHTSA under agreement for the purpose of evaluation. Except for review and comment by the public, these drawings shall not be copied or used for any other purpose.

FOR DISCUSSION PURPOSES ONLY
- DO NOT MANUFACTURE!

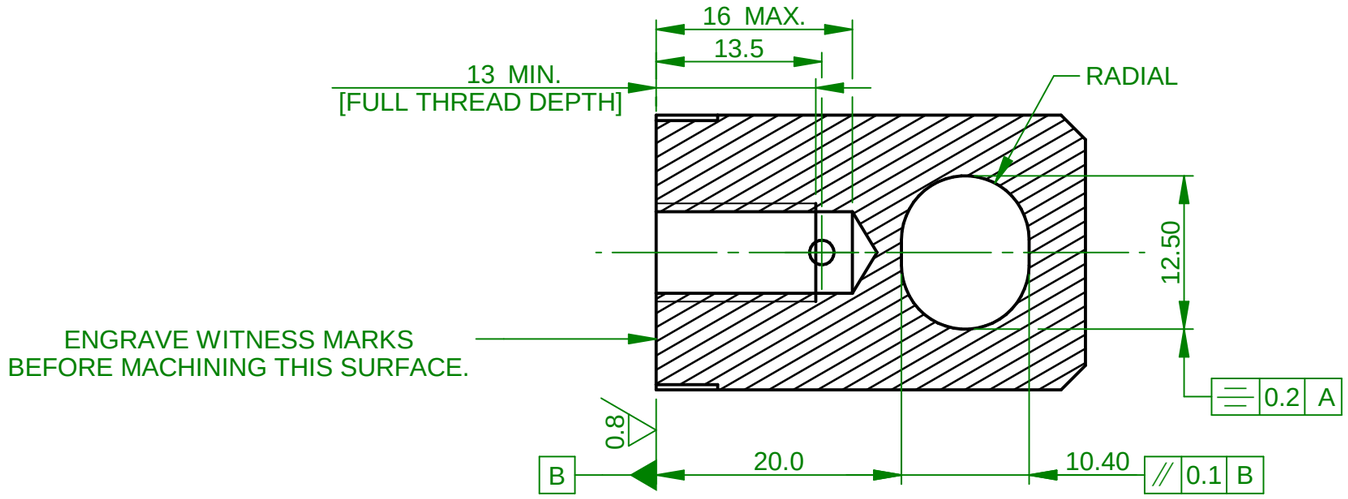

SECTION A-A

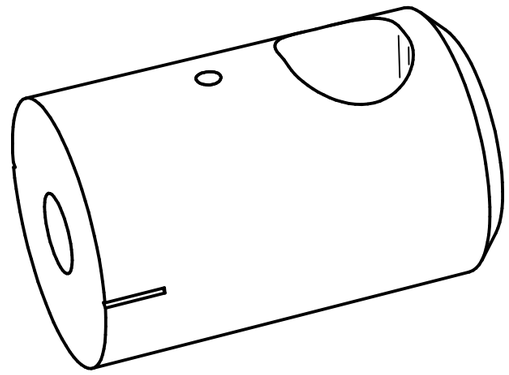

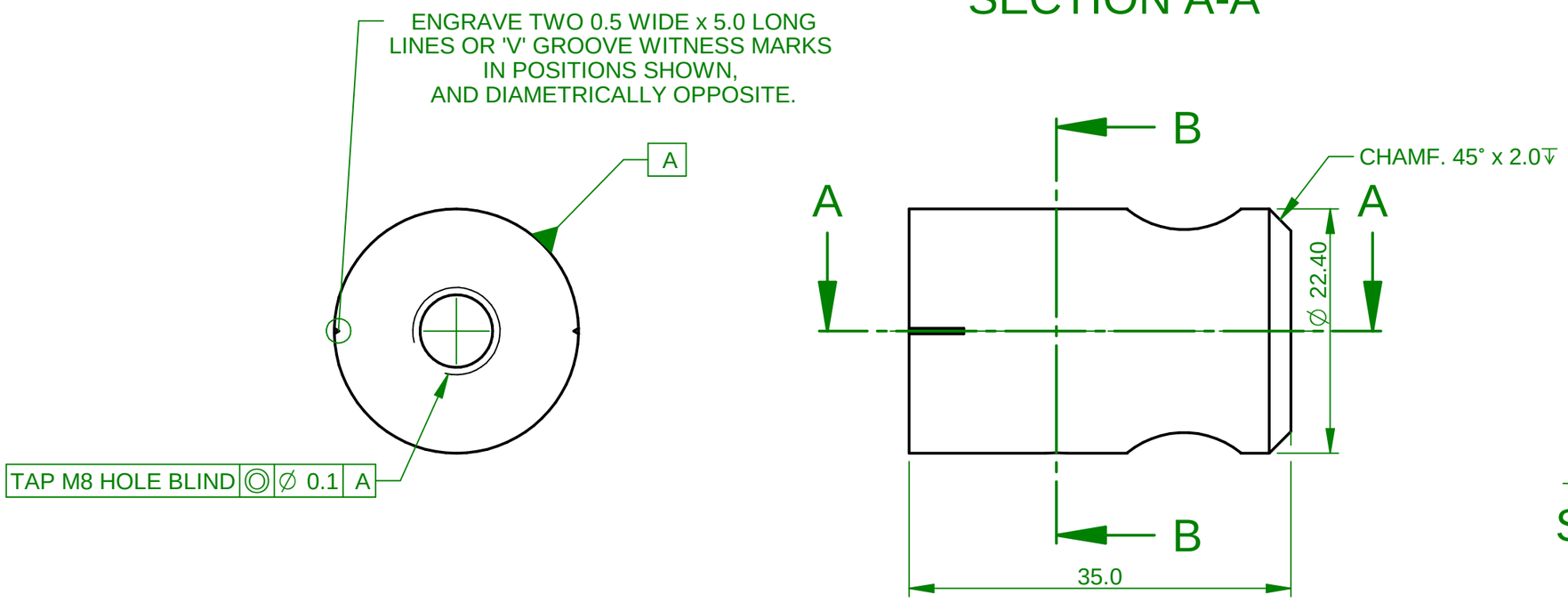

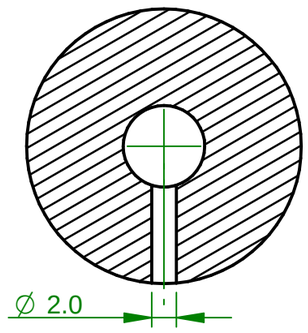

SECTION B-B

FOR DISCUSSION PURPOSES ONLY
- DO NOT MANUFACTURE!

© 2018 COPYRIGHT TRL LTD. ALL RIGHTS RESERVED. DRAWING BASED ON BS8888.UNLESS OTHERWISE SPECIFIED
DIMENSIONS ARE IN MILLIMETERS. REMOVE ALL BURRS AND SHARP EDGES.

GENERAL TOLERANCES
UNLESS STATED OTHERWISE:

2 Dec. Places	: ±0.1 mm
1 Dec. Places	: ±0.5 mm
0 - 1000	: ±1 mm
1000 - 4000	: ±2 mm
4000 +	: ±3 mm

	NAME	DATE
DRAWN	Y	12/09/16
CHECKED	Y	
APPROVED	Y	

TRL

TITLE	LOAD TRANSDUCER ADAPTOR
DWG NO	N1212-02-S05-001
REV	G
MATERIAL	BS970 - 070M20 STEEL (OR EQUIVALENT)
FINISH	BRIGHT ZINC PLATED
PROJECT	UPPER LEGFORM
SIZE	A3
SHEET	1 OF 1

These drawings are the property of TRL LTD. and are being provided to NHTSA under agreement for the purpose of evaluation. Except for review and comment by the public, these drawings shall not be copied or used for any other purpose.

NOTES:

1. IF IN DOUBT CONTACT THE DRAWING PROVIDER.