These drawings are the property of TRL LTD. and are being provided to NHTSA under agreement for the purpose of evaluation. Except for review and comment by the public, these drawings shall not be copied or used for any other purpose.

FOR DISCUSSION PURPOSES ONLY - DO NOT MANUFACTURE!

No.	Qty.	Drawing No.	Rev.	Description
1	2	N1212-02-S01-001	E	REAR MEMBER SIDE ARM
2	1	N1212-02-S01-002	D	CLUTCH PLATE SPACER
3	2	N1212-02-S01-003	G	CLUTCH PLATE, INNER
4	2	N1212-02-S01-004	D	REAR MEMBER, END PLATE
5	2	N1212-02-S01-005	E	LOAD TRANSDUCER MOUNTING BLOCK
6	4	N1212-02-S01-006	D	WEIGHT SUPPORT BRACKET
7	8	N1212-02-S01-008	A	THREADED INSERT

NOTES:

1. REMOVE SHARP EDGES EXCEPT OF GROUND SURFACES OF ITEMS 3 AND 5.
2. THIS ITEM IS SYMMETRICAL ABOUT: C/L
3. (TP) = TRUE POSITION
4. FINISH: BRIGHT ZINC PLATED OMIT FROM SURFACE OF ITEM 5.
5. ITEM 7 HAS NO DRAWING. IT IS A M8 x 13 HEAVY DUTY RIVET BUSH.
6. IF IN DOUBT CONTACT THE DRAWING PROVIDER.

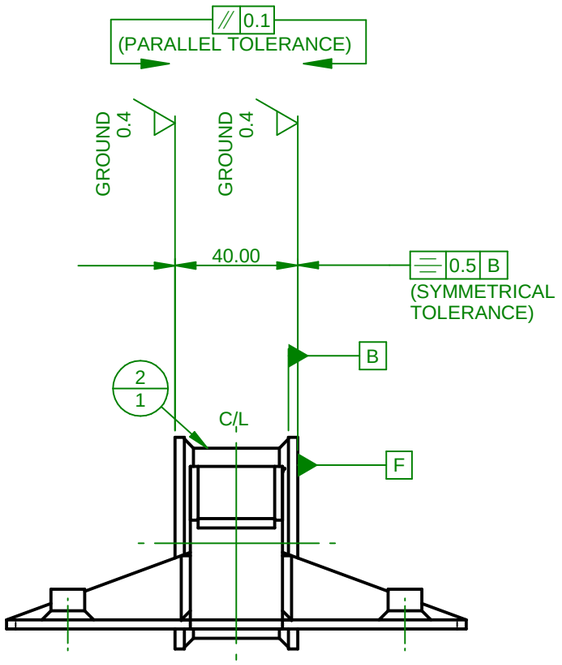

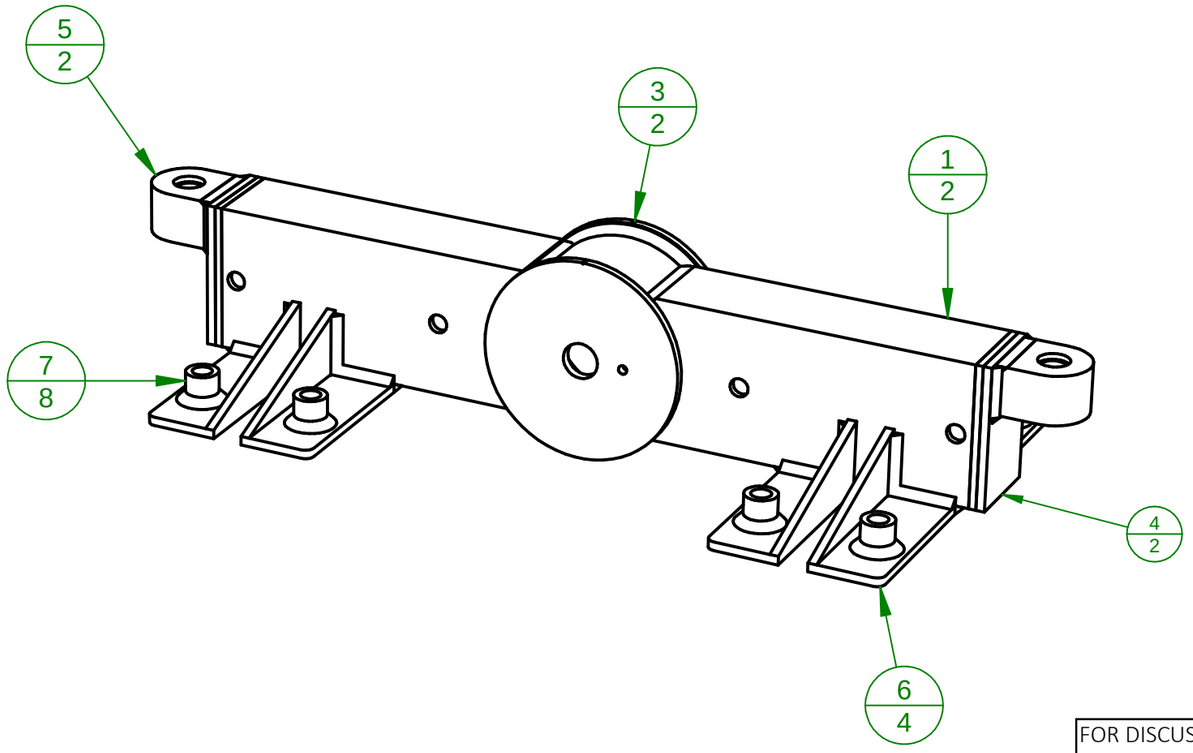

FOR DISCUSSION PURPOSES ONLY - DO NOT MANUFACTURE!

© 2018 COPYRIGHT TRL LTD. ALL RIGHTS RESERVED. DRAWING BASED ON BS8888.UNLESS OTHERWISE SPECIFIED DIMENSIONS ARE IN MILLIMETERS. REMOVE ALL BURRS AND SHARP EDGES.

GENERAL TOLERANCES UNLESS STATED OTHERWISE:

2 Dec. Places	: ±0.1 mm
1 Dec. Places	: ±0.5 mm
0 - 1000	: ±1 mm
1000 - 4000	: ±2 mm
4000 +	: ±3 mm

	NAME	DATE
DRAWN	Y	18/03/13
CHECKED	Y	
APPROVED	Y	

TITLE: REAR MEMBER ASSEMBLY

DWG NO: N1212-02-G01-S01 REV: J

MATERIAL: SEE BOM

FINISH: SEE ABOVE

PROJECT: UPPER LEGFORM

SIZE: A3 SHEET: 1 OF 2

These drawings are the property of TRL LTD. and are being provided to NHTSA under agreement for the purpose of evaluation. Except for review and comment by the public, these drawings shall not be copied or used for any other purpose.

These drawings are the property of TRL LTD. and are being provided to NHTSA under agreement for the purpose of evaluation. Except for review and comment by the public, these drawings shall not be copied or used for any other purpose.

FOR DISCUSSION PURPOSES ONLY - DO NOT MANUFACTURE!

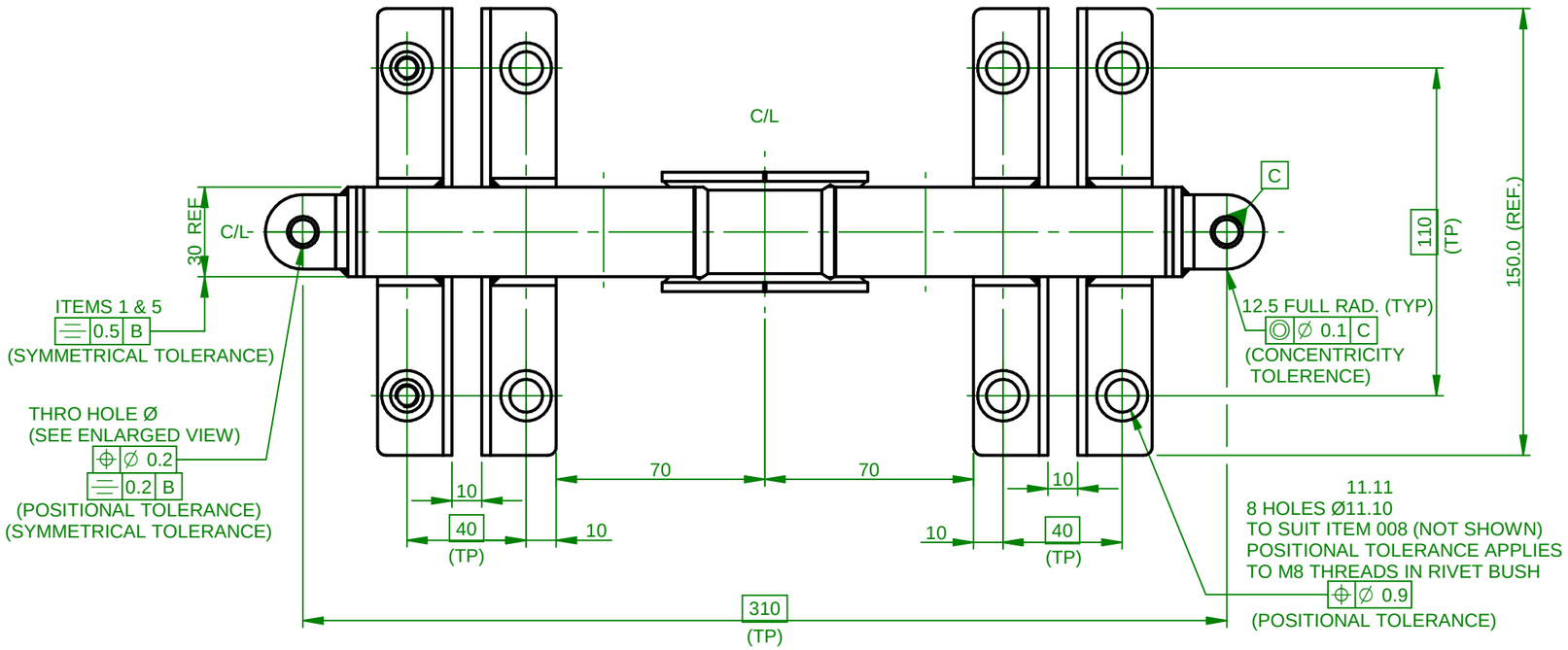

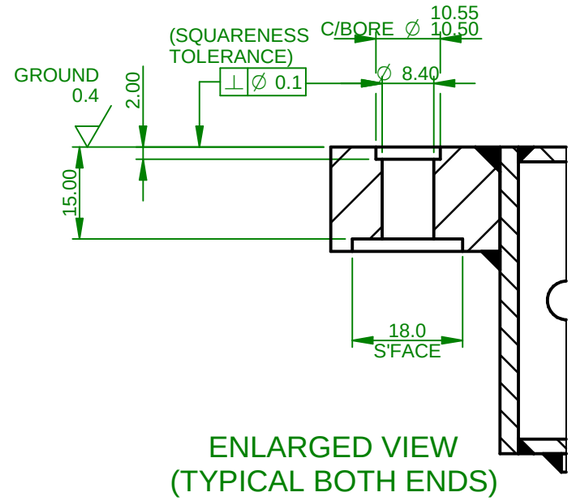

ENLARGED VIEW
(TYPICAL BOTH ENDS)

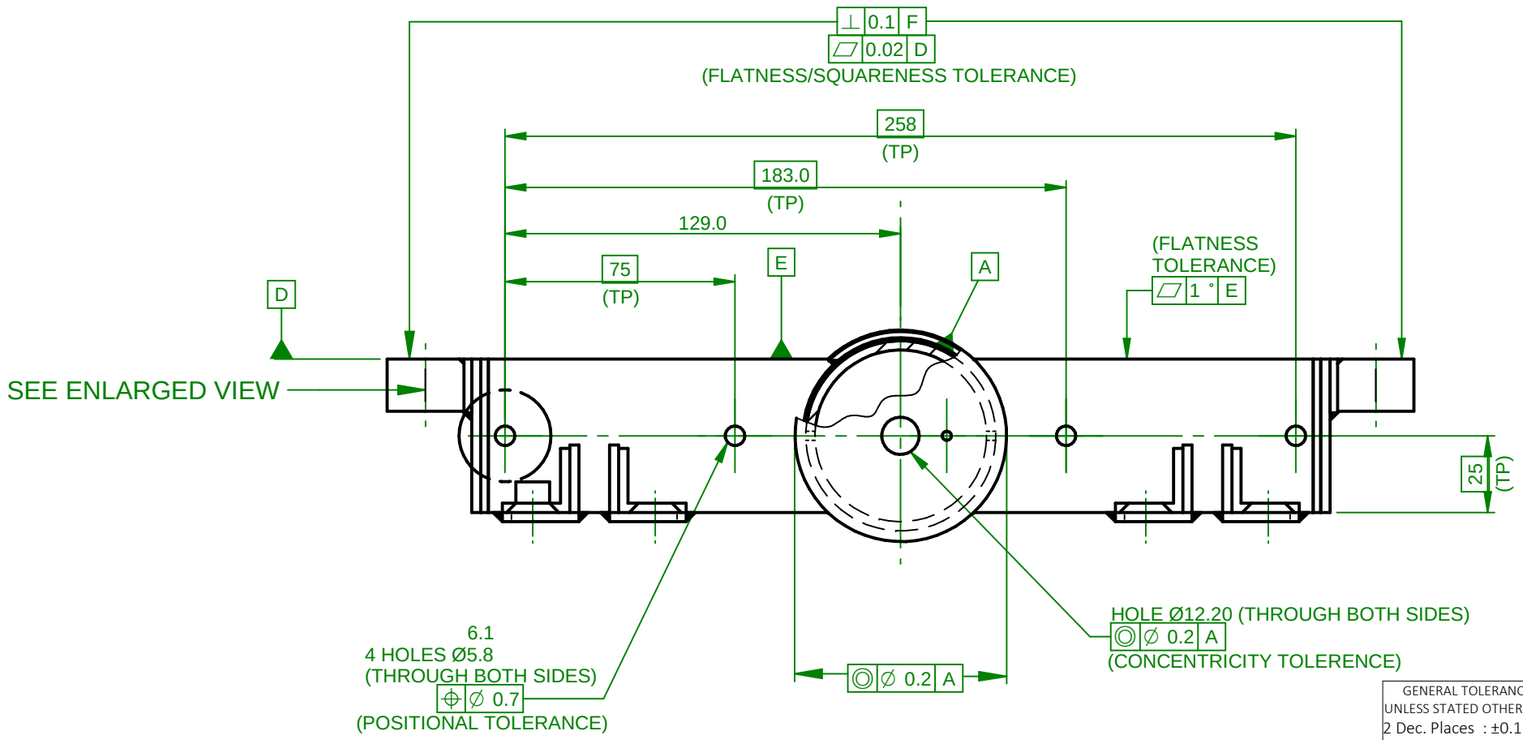

These drawings are the property of TRL LTD. and are being provided to NHTSA under agreement for the purpose of evaluation. Except for review and comment by the public, these drawings shall not be copied or used for any other purpose.

FOR DISCUSSION PURPOSES ONLY - DO NOT MANUFACTURE!

© 2018 COPYRIGHT TRL LTD. ALL RIGHTS RESERVED. DRAWING BASED ON BS8888.UNLESS OTHERWISE SPECIFIED DIMENSIONS ARE IN MILLIMETERS. REMOVE ALL BURRS AND SHARP EDGES.

	NAME	DATE
DRAWN	Y	18/03/13
CHECKED	Y	
APPROVED	Y	

TITLE: REAR MEMBER ASSEMBLY

DWG NO: N1212-02-G01-S01

REV: J

MATERIAL: SEE BOM

FINISH: SEE ABOVE

PROJECT: UPPER LEGFORM

SIZE: A3

SHEET: 2 OF 2

GENERAL TOLERANCES UNLESS STATED OTHERWISE:

2 Dec. Places	: ±0.1 mm
1 Dec. Places	: ±0.5 mm
0 - 1000	: ±1 mm
1000 - 4000	: ±2 mm
4000 +	: ±3 mm