These drawings are the property of TRL LTD. and are being provided to NHTSA under agreement for the purpose of evaluation. Except for review and comment by the public, these drawings shall not be copied or used for any other purpose.

FOR DISCUSSION PURPOSES ONLY - DO NOT MANUFACTURE!

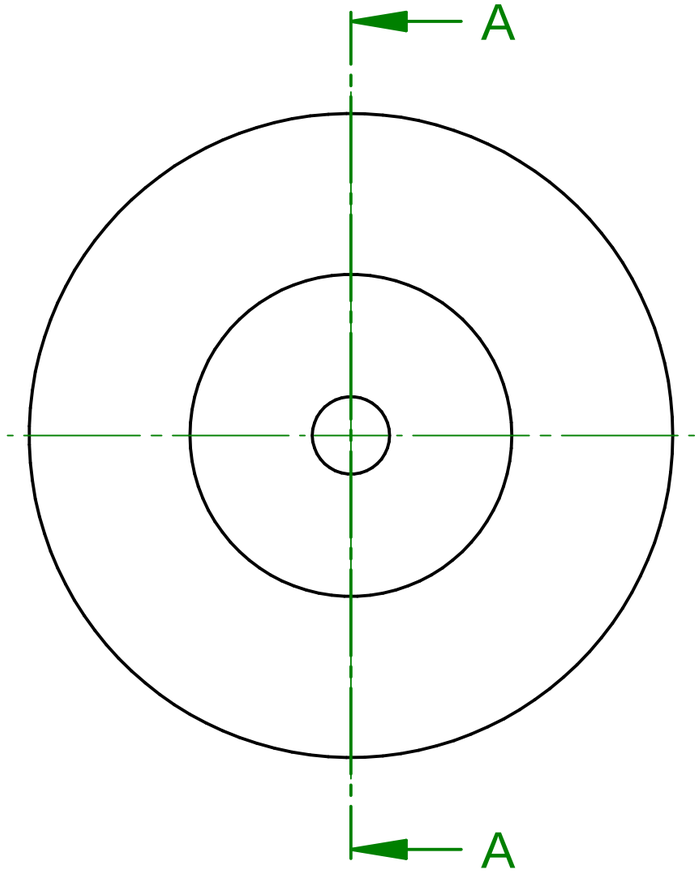

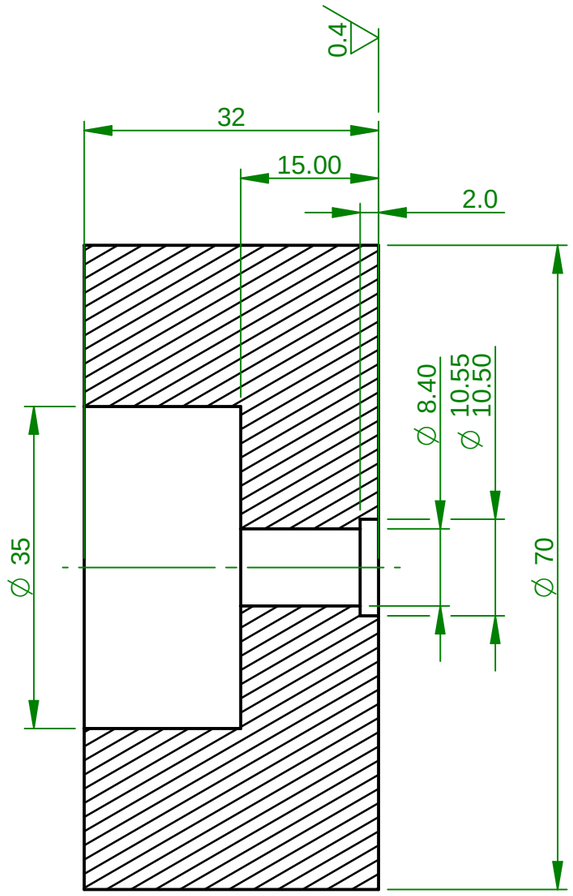

SECTION A-A

FOR DISCUSSION PURPOSES ONLY - DO NOT MANUFACTURE!

© 2018 COPYRIGHT TRL LTD. ALL RIGHTS RESERVED. DRAWING BASED ON BS8888.UNLESS OTHERWISE SPECIFIED DIMENSIONS ARE IN MILLIMETERS. REMOVE ALL BURRS AND SHARP EDGES.

GENERAL TOLERANCES UNLESS STATED OTHERWISE:

2 Dec. Places	: ±0.1 mm
1 Dec. Places	: ±0.5 mm
0 - 1000	: ±1 mm
1000 - 4000	: ±2 mm
4000 +	: ±3 mm

	NAME	DATE
DRAWN	Y	14/09/16
CHECKED	Y	
APPROVED	Y	

TITLE: LOAD TRANSDUCER CALIBRATION MOUNT

DWG NO: N1212-02-G01-047

REV: E

MATERIAL: BS970 - 070M20 STEEL (OR EQUIVALENT)

FINISH: ZINC PLATE & PASSIVATE

PROJECT: UPPER LEGFORM

SIZE: A3

SHEET: 1 OF 1

NOTES:

1. IF IN DOUBT CONTACT THE DRAWING PROVIDER.

These drawings are the property of TRL LTD. and are being provided to NHTSA under agreement for the purpose of evaluation. Except for review and comment by the public, these drawings shall not be copied or used for any other purpose.