These drawings are the property of TRL LTD. and are being provided to NHTSA under agreement for the purpose of evaluation. Except for review and comment by the public, these drawings shall not be copied or used for any other purpose.

FOR DISCUSSION PURPOSES ONLY
- DO NOT MANUFACTURE!

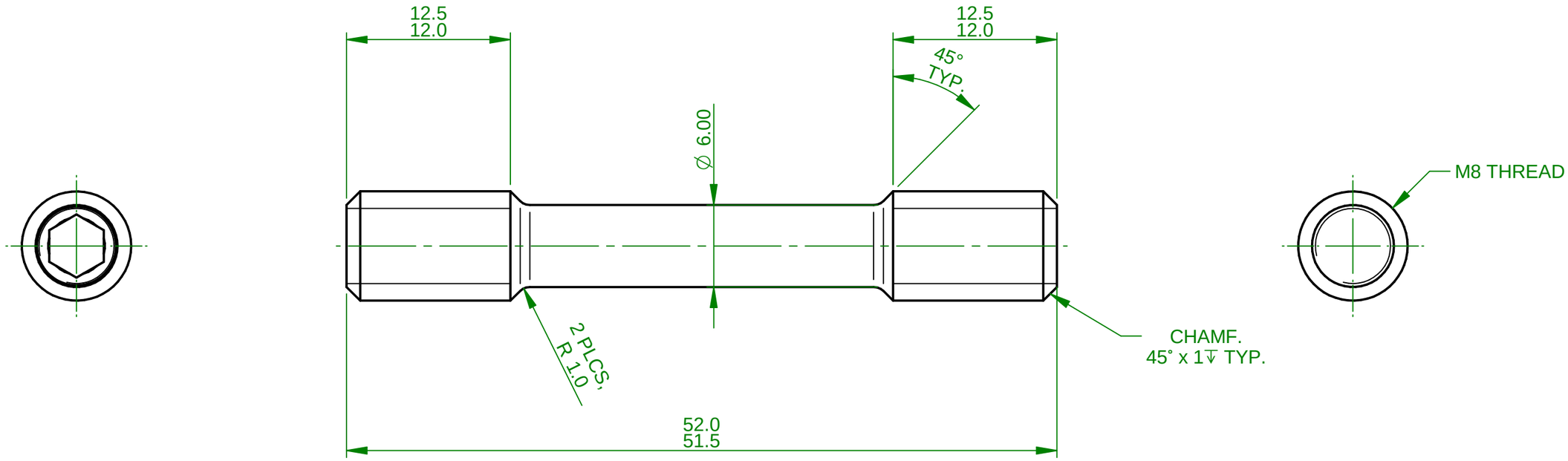

MATERIAL:

A. RE-WORKED, HEX. SOCKET, SET SCREW M8 x 55 MIN. LENGTH TO BS 4168 STEEL (OR EQUIVALENT), HIGH GRADE ALLOY, OIL HARDENED AND TEMPERED.

FOR DISCUSSION PURPOSES ONLY
- DO NOT MANUFACTURE!

© 2018 COPYRIGHT TRL LTD. ALL RIGHTS RESERVED. DRAWING BASED ON BS8888.UNLESS OTHERWISE SPECIFIED DIMENSIONS ARE IN MILLIMETERS. REMOVE ALL BURRS AND SHARP EDGES.

GENERAL TOLERANCES UNLESS STATED OTHERWISE:

2 Dec. Places	: ±0.1 mm
1 Dec. Places	: ±0.5 mm
0 - 1000	: ±1 mm
1000 - 4000	: ±2 mm
4000 +	: ±3 mm

	NAME	DATE
DRAWN	Y	12/09/16
CHECKED	Y	
APPROVED	Y	

TITLE: LOAD TRANSDUCER STUD

DWG NO: N1212-02-S05-002

REV: E

MATERIAL: SEE NOTE

FINISH: SEE NOTE

PROJECT: UPPER LEGFORM

SIZE: A3

SHEET: 1 OF 1

These drawings are the property of TRL LTD. and are being provided to NHTSA under agreement for the purpose of evaluation. Except for review and comment by the public, these drawings shall not be copied or used for any other purpose.

NOTES:

1. IF IN DOUBT CONTACT THE DRAWING PROVIDER.