FOR DISCUSSION PURPOSES ONLY
- DO NOT MANUFACTURE!

These drawings are the property of TRL LTD. and are being provided to NHTSA under agreement for the purpose of evaluation. Except for review and comment by the public, these drawings shall not be copied or used for any other purpose.

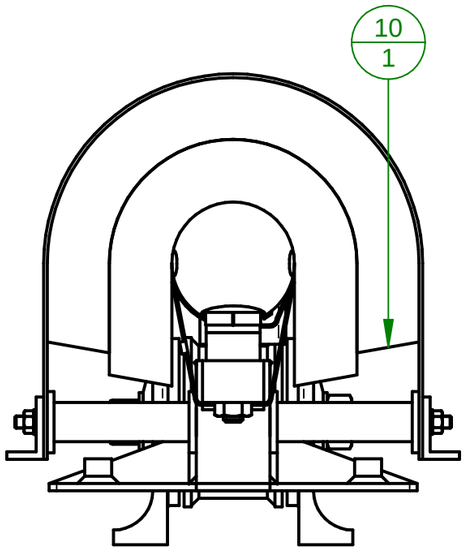

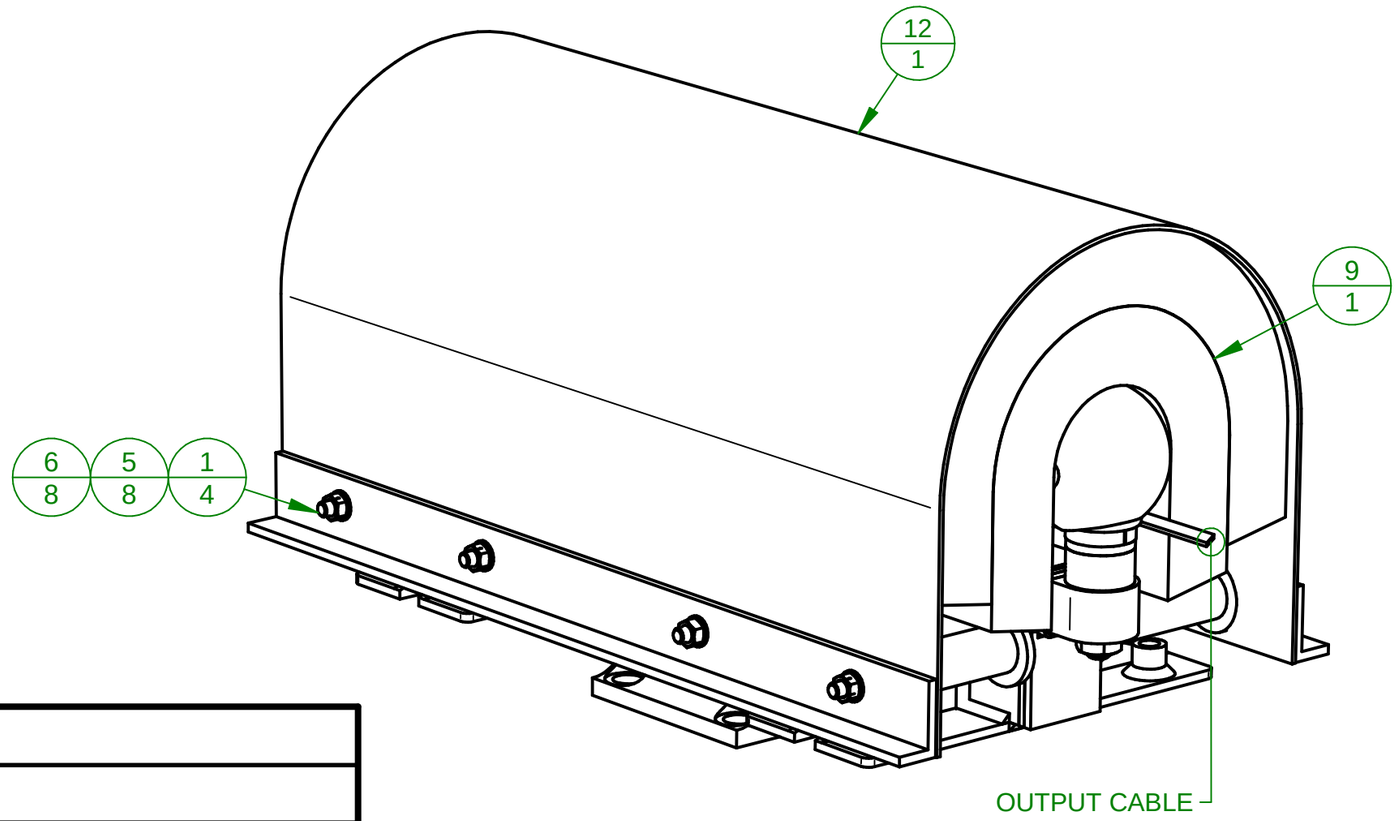

No.	Qty.	Drawing No.	Rev.	Description
1	4	HARDWARE	-	STUDDING, M5 x 178mm
2	2	HARDWARE	-	CABLE TIE, 3.6mm x 300mm LONG
3	2	HARDWARE	-	CENTRING SLEEVE
4	2	HARDWARE	-	LOAD TRANSDUCER
5	8	HARDWARE	-	M5 WASHER
6	8	HARDWARE	-	M5 NUT
7	1	N1212-00-G01-S02	M	FRONT MEMBER ASSEMBLY
8	2	N1212-02-G01-006	D	CORK SLEEVE
9	1	N1212-02-G01-007	H	INNER FLESH (UL-FLi)
10	1	N1212-02-G01-007	H	OUTER FLESH (UL-FLo)
11	8	N1212-02-G01-046	F	SKIN SPACER TUBE ASSEMBLY
12	1	N1212-02-G01-S03	F	IMPACTOR SKIN ASSEMBLY
13	1	N1212-02-G01-S04	D	REAR CLUTCH ASSEMBLY
14	2	N1212-02-G01-S05	F	LOAD TRANSDUCER STUD/ADAPTOR ASSEMBLY
15	2	N1212-02-S02-011	A	LOAD TRANSDUCER ADAPTOR PIN

These drawings are the property of TRL LTD. and are being provided to NHTSA under agreement for the purpose of evaluation. Except for review and comment by the public, these drawings shall not be copied or used for any other purpose.

FOR DISCUSSION PURPOSES ONLY
- DO NOT MANUFACTURE!

NOTES:

1. MASS OF ASSEMBLY: 5.6 - 5.85 kg [APPROX. 12.34 - 12.90lbs].

2. IF IN DOUBT PLEASE CONTACT THE DRAWING PROVIDER.

© 2018 COPYRIGHT TRL LTD. ALL RIGHTS RESERVED. DRAWING BASED ON BS8888.UNLESS OTHERWISE SPECIFIED DIMENSIONS ARE IN MILLIMETERS. REMOVE ALL BURRS AND SHARP EDGES.

	NAME	DATE
DRAWN	Y	24/08/16
CHECKED	Y	
APPROVED	Y	

TRL

TITLE: UPPER LEGFORM ASSEMBLY

DWG NO: N1212-02-000-G01

REV: J

MATERIAL: SEE BOM

FINISH: -

PROJECT: UPPER LEGFORM

SIZE: A3

SHEET: 1 OF 2

ITEMS 9, 10 AND 12 REMOVED FROM THIS SHEET'S VIEWS FOR CLARITY

FOR DISCUSSION PURPOSES ONLY - DO NOT MANUFACTURE!

These drawings are the property of TRL LTD. and are being provided to NHTSA under agreement for the purpose of evaluation. Except for review and comment by the public, these drawings shall not be copied or used for any other purpose.

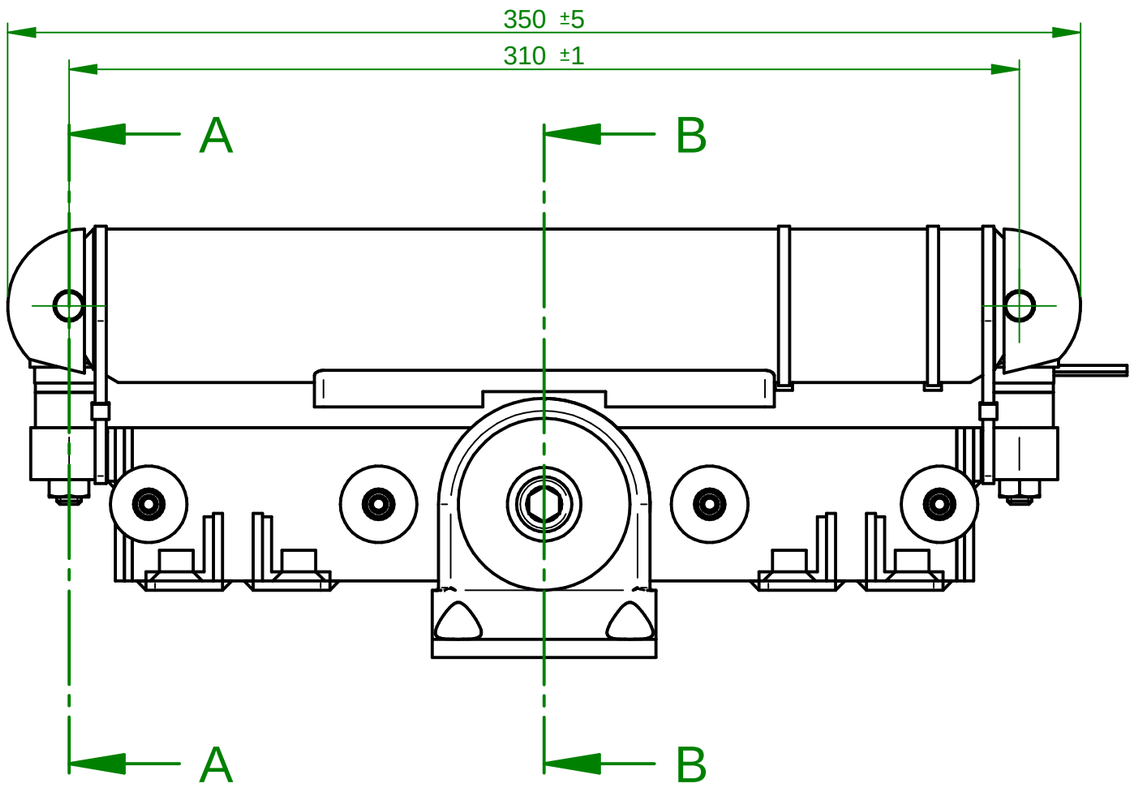

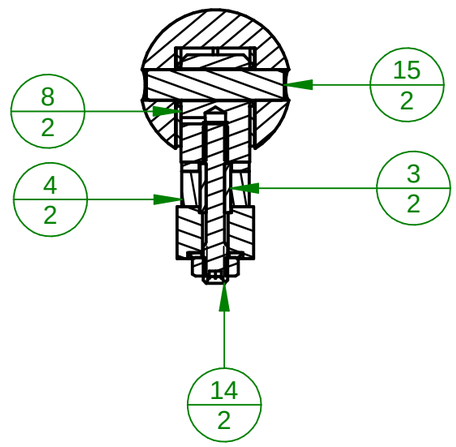

SECTION A-A

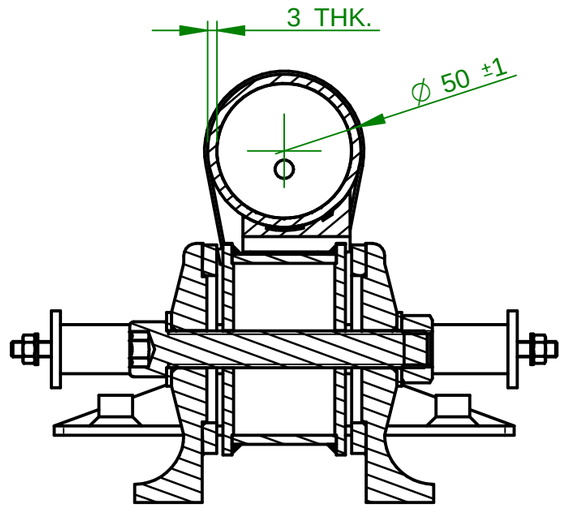

SECTION B-B

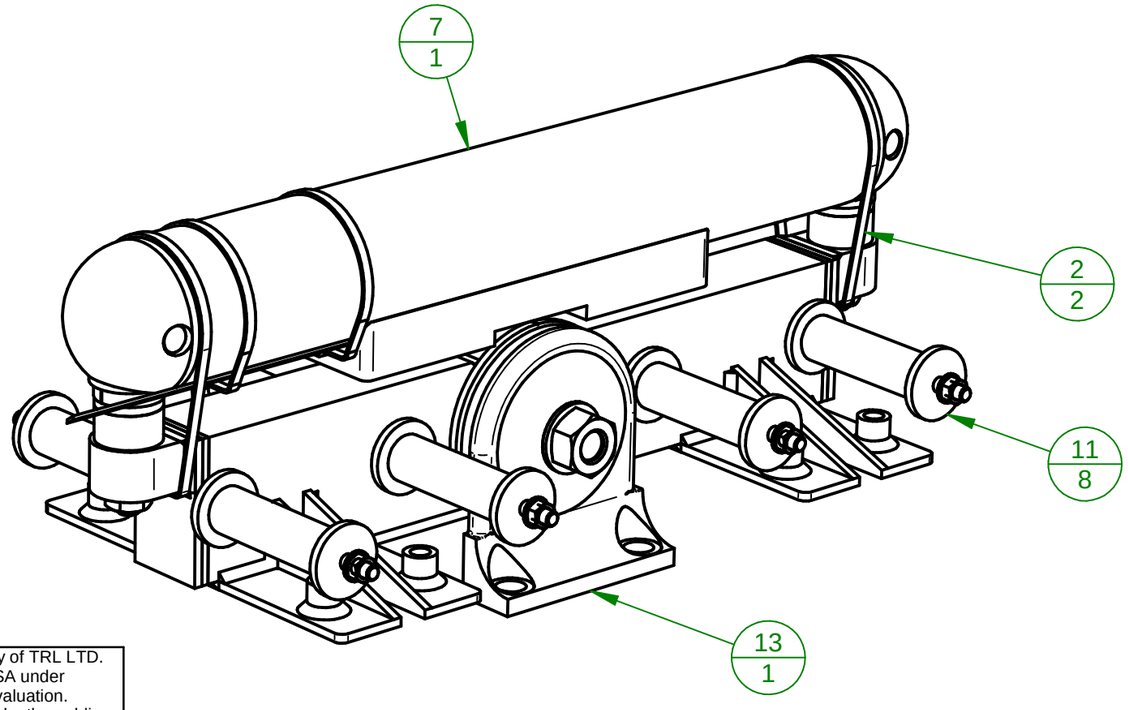

These drawings are the property of TRL LTD. and are being provided to NHTSA under agreement for the purpose of evaluation. Except for review and comment by the public, these drawings shall not be copied or used for any other purpose.

FOR DISCUSSION PURPOSES ONLY - DO NOT MANUFACTURE!

ITEMS 9, 10 AND 12 REMOVED FROM THIS SHEET'S VIEWS FOR CLARITY

© 2018 COPYRIGHT TRL LTD. ALL RIGHTS RESERVED. DRAWING BASED ON BS8888.UNLESS OTHERWISE SPECIFIED DIMENSIONS ARE IN MILLIMETERS. REMOVE ALL BURRS AND SHARP EDGES.

	NAME	DATE
DRAWN	Y	24/08/16
CHECKED	Y	
APPROVED	Y	

TRL

TITLE	UPPER LEGFORM ASSEMBLY
DWG NO	N1212-02-000-G01
REV	J
MATERIAL	SEE BOM
FINISH	-
PROJECT	UPPER LEGFORM
SIZE	A3
SHEET	2 OF 2