These drawings are the property of TRL LTD. and are being provided to NHTSA under agreement for the purpose of evaluation. Except for review and comment by the public, these drawings shall not be copied or used for any other purpose.

FOR DISCUSSION PURPOSES ONLY
- DO NOT MANUFACTURE!

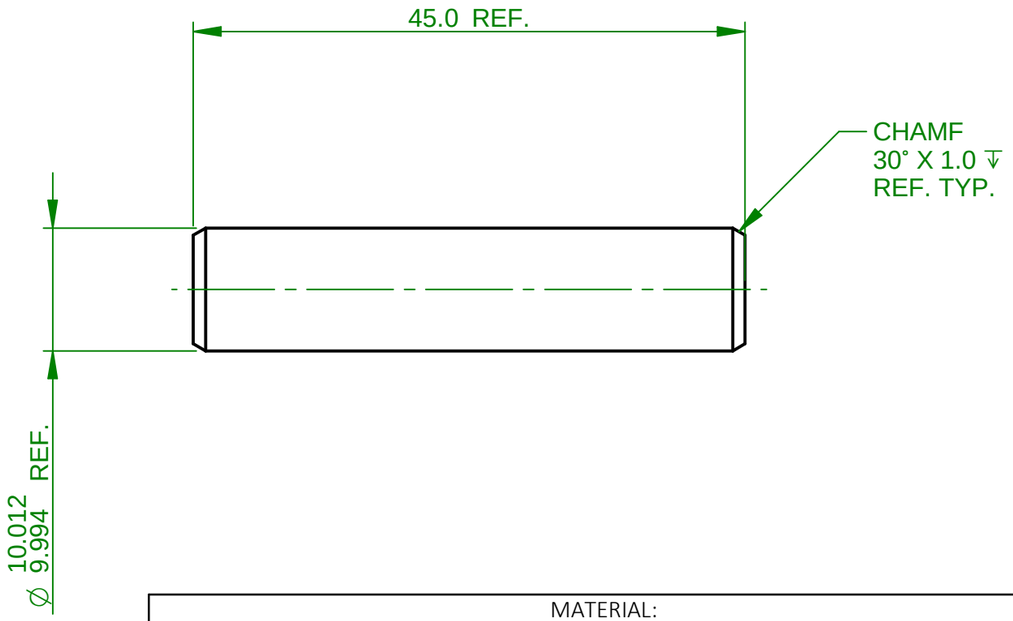

MATERIAL:

A. STANDARD PARALLEL DOWEL PIN, LOW CARBON STEEL TO BS970 : 725M17 (En32A or B) Ø10.0 x 45.0 - GRADE 1 (HARDENED) OR EQUIVALENT.

NOTES:

1. TO BE SUPPLIED IN MATCHED PAIRS (ON DIA) TO PROVIDE CORRECT FIT INTO ITEM IN DRAWING N1212-02-S02-001.

2. IF IN DOUBT CONTACT THE DRAWING PROVIDER.

GENERAL TOLERANCES UNLESS STATED OTHERWISE:

2 Dec. Places	: ±0.1 mm
1 Dec. Places	: ±0.5 mm
0 - 1000	: ±1 mm
1000 - 4000	: ±2 mm
4000 +	: ±3 mm

These drawings are the property of TRL LTD. and are being provided to NHTSA under agreement for the purpose of evaluation. Except for review and comment by the public, these drawings shall not be copied or used for any other purpose.

FOR DISCUSSION PURPOSES ONLY
- DO NOT MANUFACTURE!

© 2018 COPYRIGHT TRL LTD. ALL RIGHTS RESERVED. DRAWING BASED ON BS8888.UNLESS OTHERWISE SPECIFIED DIMENSIONS ARE IN MILLIMETERS. REMOVE ALL BURRS AND SHARP EDGES.

	NAME	DATE
DRAWN	Y	14/09/16
CHECKED	Y	
APPROVED	Y	

TRL

TITLE: LOAD TRANSDUCER ADAPTOR PIN

DWG NO: N1212-02-S02-011

REV: A

MATERIAL: SEE ABOVE

FINISH: LIGHTLY OIL

PROJECT: UPPER LEGFORM

SIZE: A3

SHEET: 1 OF 1