These drawings are the property of TRL LTD. and are being provided to NHTSA under agreement for the purpose of evaluation. Except for review and comment by the public, these drawings shall not be copied or used for any other purpose.

FOR DISCUSSION PURPOSES ONLY - DO NOT MANUFACTURE!

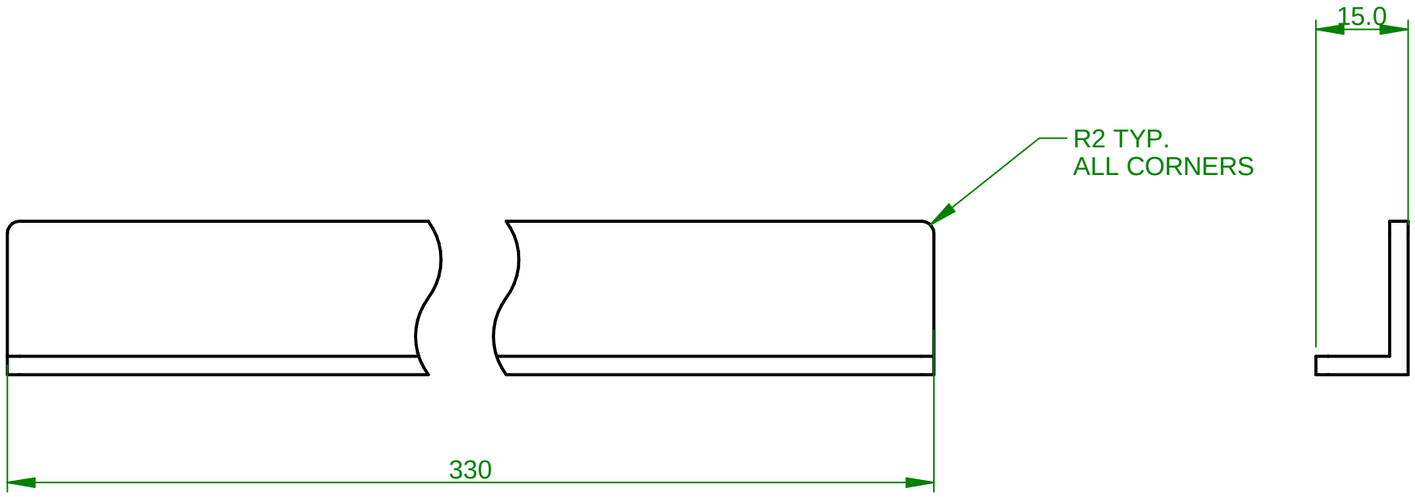

MATERIAL: ALUMINIUM UNEQUAL ANGLE 25x15x3 (1" x 5/8" x 1/8" ins.)

FOR DISCUSSION PURPOSES ONLY - DO NOT MANUFACTURE!

© 2018 COPYRIGHT TRL LTD. ALL RIGHTS RESERVED. DRAWING BASED ON BS8888.UNLESS OTHERWISE SPECIFIED DIMENSIONS ARE IN MILLIMETERS. REMOVE ALL BURRS AND SHARP EDGES.

GENERAL TOLERANCES UNLESS STATED OTHERWISE:
2 Dec. Places : ±0.1 mm
1 Dec. Places : ±0.5 mm
0 - 1000 : ±1 mm
1000 - 4000 : ±2 mm
4000 + : ±3 mm

	NAME	DATE
DRAWN	Y	14/09/16
CHECKED	Y	
APPROVED	Y	

TITLE: SKIN ANGLE BRACKET

DWG NO: N1212-02-S03-001

REV: C

MATERIAL: SEE ABOVE

FINISH: NONE

PROJECT: UPPER LEGFORM

SIZE: A3

SHEET: 1 OF 1

These drawings are the property of TRL LTD. and are being provided to NHTSA under agreement for the purpose of evaluation. Except for review and comment by the public, these drawings shall not be copied or used for any other purpose.

NOTES:

1. IF IN DOUBT CONTACT THE DRAWING PROVIDER.