These drawings are the property of TRL LTD. and are being provided to NHTSA under agreement for the purpose of evaluation. Except for review and comment by the public, these drawings shall not be copied or used for any other purpose.

FOR DISCUSSION PURPOSES ONLY - DO NOT MANUFACTURE!

No.	Qty.	Drawing No.	Rev.	Description
1	2	HARDWARE	-	WASHER M12 DIN 125-A
2	1	HARDWARE	-	M12 NUT ISO 4032
3	1	N1212-02-G01-009	D	PIVOT BOLT
4	1	N1212-02-G01-S01	J	REAR MEMBER ASSEMBLY
5	2	N1212-02-S04-008	H	CLUTCH PLATE OUTER
6	2	N1212-02-S04-010	G	FRICTION DISK

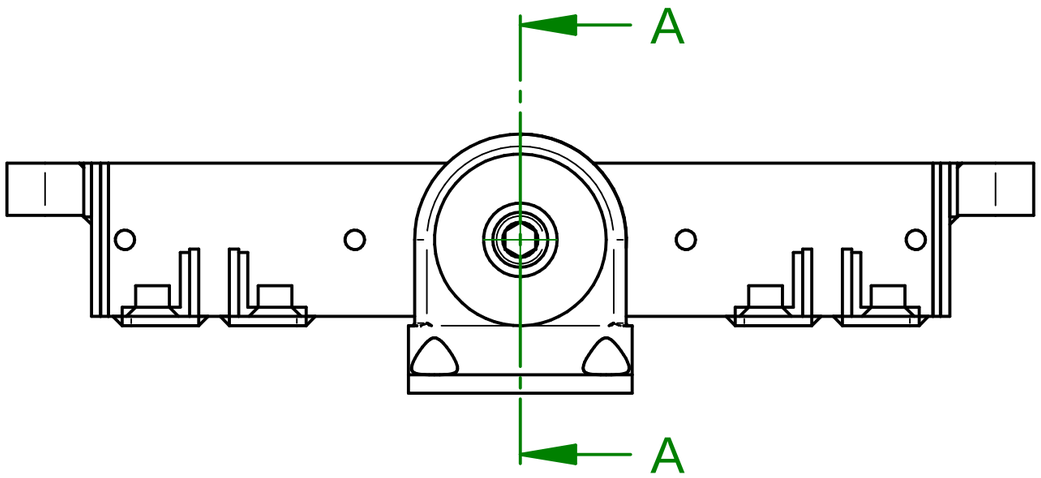

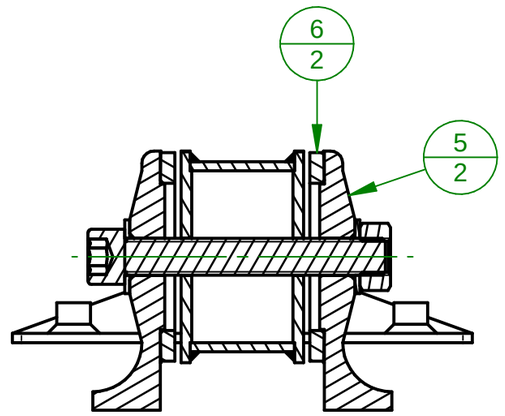

SECTION A-A

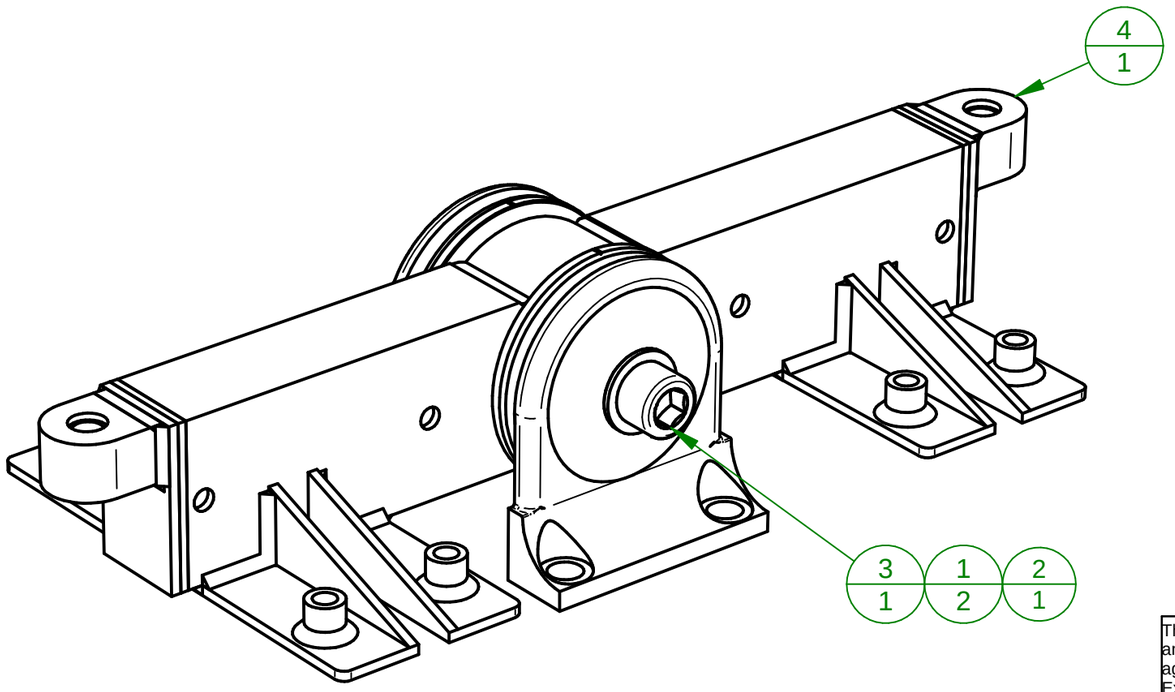

NOTES:

1. IF IN DOUBT CONTACT THE DRAWING PROVIDER.

FOR DISCUSSION PURPOSES ONLY - DO NOT MANUFACTURE!

© 2018 COPYRIGHT TRL LTD. ALL RIGHTS RESERVED. DRAWING BASED ON BS8888.UNLESS OTHERWISE SPECIFIED DIMENSIONS ARE IN MILLIMETERS. REMOVE ALL BURRS AND SHARP EDGES.

	NAME	DATE
DRAWN	Y	25/08/16
CHECKED	Y	
APPROVED	Y	

TRL

TITLE: REAR CLUTCH ASSEMBLY

DWG NO: N1212-02-G01-S04

REV: D

MATERIAL: SEE BOM

FINISH: CLEAN

PROJECT: UPPER LEGFORM

SIZE: A3

SHEET: 1 OF 1

These drawings are the property of TRL LTD. and are being provided to NHTSA under agreement for the purpose of evaluation. Except for review and comment by the public, these drawings shall not be copied or used for any other purpose.