REVISIONS				
ECO/ECR#	REV.	DESCRIPTION	DATE	CHANGED BY
	A			

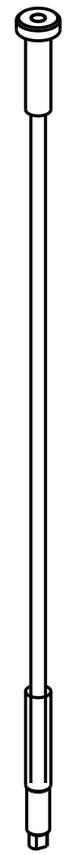

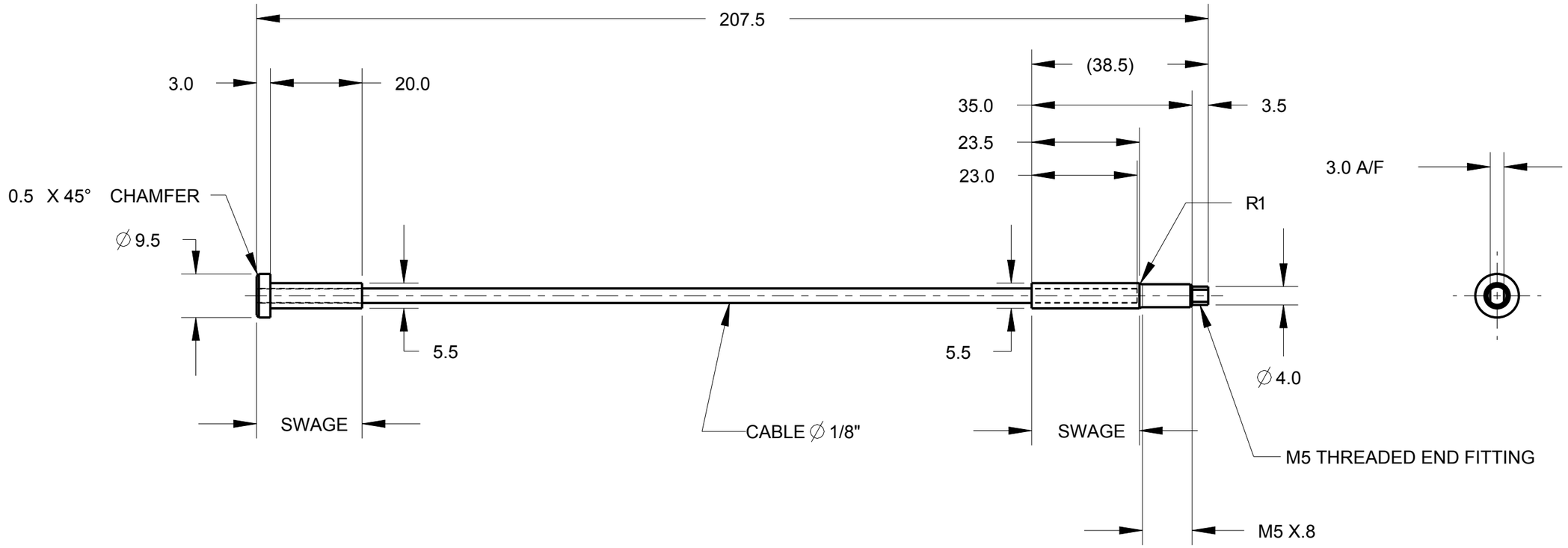

NOTES:

1. MATERIAL: END FITTINGS 316 S.S
   WIRE S.S

These FlexPLI lower legform drawings are the property of Humanetics, publically available through the UNECE website (www.unece.org, see document GTR9-9-11), and are being provided to NHTSA under agreement for the purpose of evaluation. Except for review and comment by the public, these drawings shall not be copied or used for any other purpose.

ITEM NO.	QTY	PART NO.	DESCRIPTION

PART LIST

NEXT ASSEMBLY	QTY	USED ON
133-5300	4	133-5000

APPLICATION

UNLESS OTHERWISE SPECIFIED
DIMENSIONS ARE IN MILLIMETERS
TOLERANCES ARE:
DECIMALS: ANGLES: MACHINED:
X ± 0.5 ±0.5 °
X.X ± 0.1
X.XX ± 0.05
ASME Y14.5M - 1994
DO NOT SCALE DRAWING

1.6

STANDARD BUILD LEVEL: NA

THIRD ANGLE PROJECTION

APPROVALS	DATE
DRAWN MJB	09-Feb-16
CHECKED	
PROD. ENG.	

MATERIAL: SEE NOTES
HEAT TREAT
FINISH

DRAWING COURTESY OF:

HUMANETICS
Innovative Solutions
FOR ADDITIONAL INFORMATION VISIT OUR WEBSITE: WWW.HUMANETICSATD.COM

CABLE ASSEMBLY, KNEE AP

SIZE A3 | DWG NO. 133-5360_FLAT | REV A

SCALE 1.000 | SHEET 1 OF 1

FORMAT: SHEET-A3 REV.: A DOCUMENT 1 OF 2

Copyright 2016 Humanetics Innovative Solutions, Inc.

PRO/ENGINEER