REVISIONS				
ECO/ECR#	REV.	DESCRIPTION	DATE	CHANGED BY
	A			

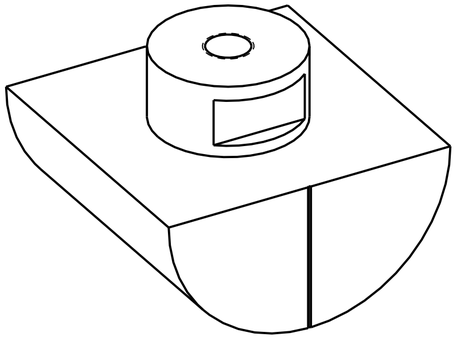

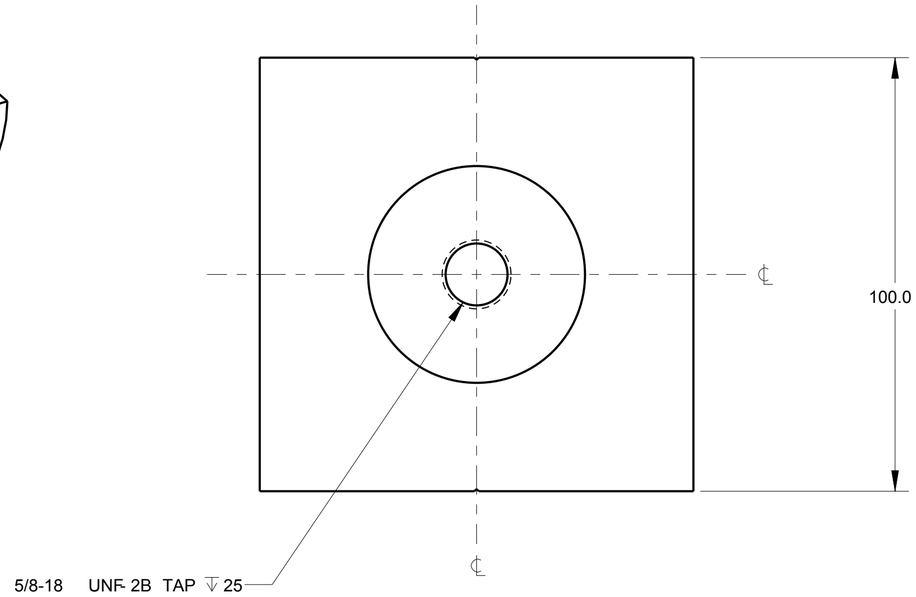

These FlexPLI lower legform drawings are the property of Humanetics, publically available through the UNECE website (www.unece.org, see document GTR9-9-11), and are being provided to NHTSA under agreement for the purpose of evaluation. Except for review and comment by the public, these drawings shall not be copied or used for any other purpose.

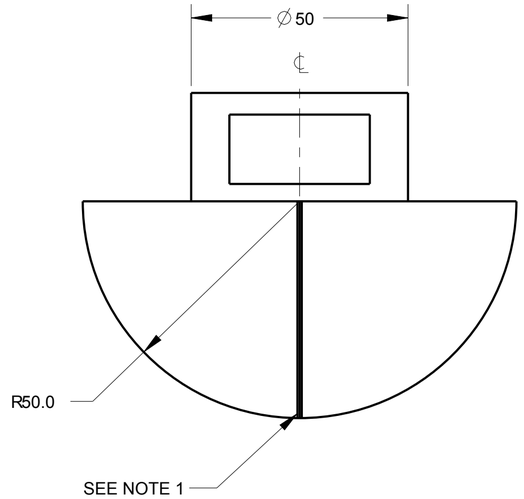

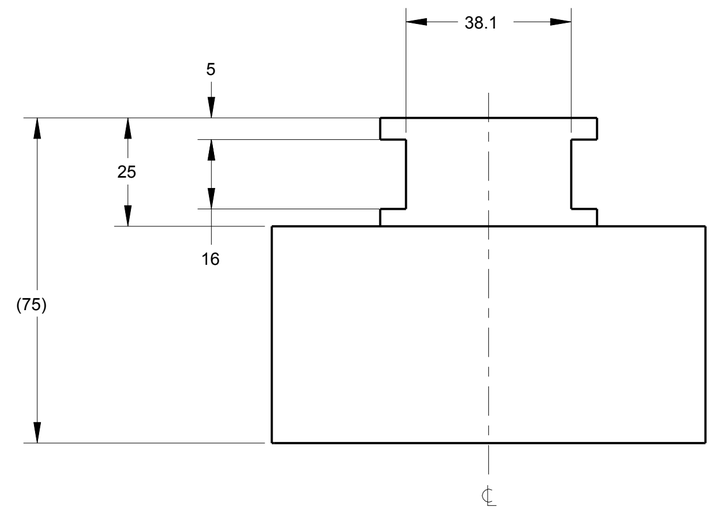

NOTES:

1. ADD SCRIBE LINE ON CENTER LINE BOTH SIDES.

ITEM NO.	QTY	PART NO.	DESCRIPTION

PART LIST

TQC TOTAL QUALITY CHECK	133-8100	1	133-8100
	NEXT ASSEMBLY	QTY	USED ON
	APPLICATION		

UNLESS OTHERWISE SPECIFIED DIMENSIONS ARE IN MILLIMETERS TOLERANCES ARE:
DECIMALS: X ± 0.5 X.X ± 0.1 X.XX ± 0.05
ANGLES: ±0.5 °
MACHINED: 1.6
ASME Y14.5M - 1994
DO NOT SCALE DRAWING

STANDARD: N/A BUILD LEVEL:
THIRD ANGLE PROJECTION

APPROVALS	DATE
DRAWN MJB	09-Feb-16
CHECKED	
PROD. ENG.	

MATERIAL 303 S.S.
HEAT TREAT.
FINISH

DRAWING COURTESY OF:
HUMANETICS Innovative Solutions
FOR ADDITIONAL INFORMATION VISIT OUR WEBSITE: WWW.HUMANETICSATD.COM

KNEE LOADING PROFILE, FLEX PLI

SIZE A2 | DWG NO. 133-8105 | REV A
SCALE 1.000 | SHEET 1 OF 1

FORMAT: SHEET A2 REV.: A DOCUMENT 1 OF 2

Copyright 2016 Humanetics Innovative Solutions, Inc.

PRO/ENGINEER