REVISIONS				
ECO/ECR#	REV.	DESCRIPTION	DATE	CHANGED BY
	A			

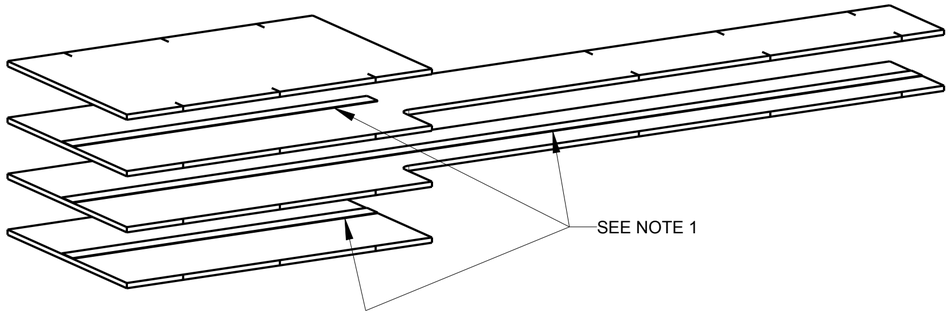

These FlexPLI lower legform drawings are the property of Humanetics, publically available through the UNECE website (www.unece.org, see document GTR9-9-11), and are being provided to NHTSA under agreement for the purpose of evaluation. Except for review and comment by the public, these drawings shall not be copied or used for any other purpose.

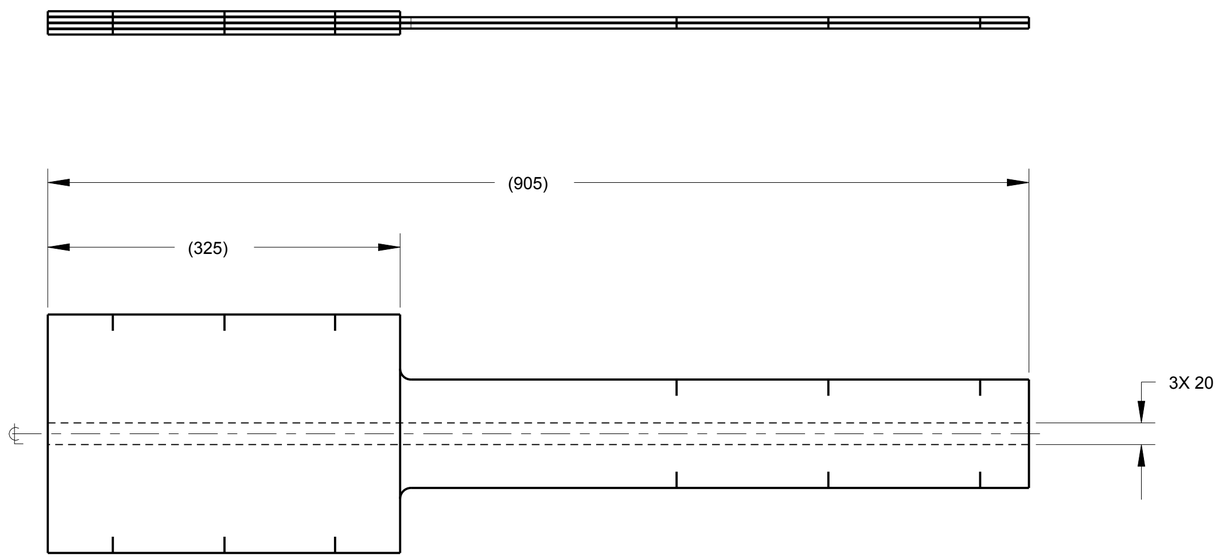

NOTES:

1. USE STRONG DOUBLE SIDED TAPE
   20mm WIDE ALONG ℄ AND TRIM AS SHOWN.

ITEM NO.	QTY	PART NO.	DESCRIPTION
3	2	133-5011	BUFFER, LEG
1	2	133-5010	BUFFER, FEMUR

PART LIST

NEXT ASSEMBLY	QTY	USED ON
133-5000	1	133-5000

APPLICATION

TQC TOTAL QUALITY CHECK

UNLESS OTHERWISE SPECIFIED DIMENSIONS ARE IN MILLIMETERS
TOLERANCES ARE:
DECIMALS: ANGLES: MACHINED:
X.X ± 0.5 ±0.5 ° 1.6
X.XX ± 0.1
X.XXX ± 0.05
ASME Y14.5M - 1994
DO NOT SCALE DRAWING

MATERIAL
HEAT TREAT.
FINISH

STANDARD BUILD LEVEL: NA

THIRD ANGLE PROJECTION

APPROVALS	DATE
DRAWN MJB	05-Feb-16
CHECKED	
PROD. ENG.	

DRAWING COURTESY OF:
HUMANETICS Innovative Solutions
FOR ADDITIONAL INFORMATION VISIT OUR WEBSITE: WWW.HUMANETICSATD.COM

BUFFER SHEET ASSEMBLY, LEG

SIZE A2 | DWG NO. 133-5020 | REV A
SCALE 0.250 | SHEET 1 OF 1

FORMAT: SHEET-A2 REV. - A DOCUMENT 1 OF 2

Copyright 2016 Humanetics Innovative Solutions, Inc.

PRO/ENGINEER