REVISIONS				
ECO/ECR#	REV.	DESCRIPTION	DATE	CHANGED BY
	B	AZ31 ADDED TO NOTES	11/12/2017	MJB

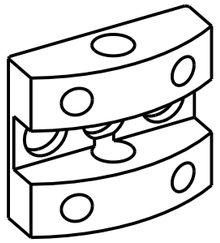

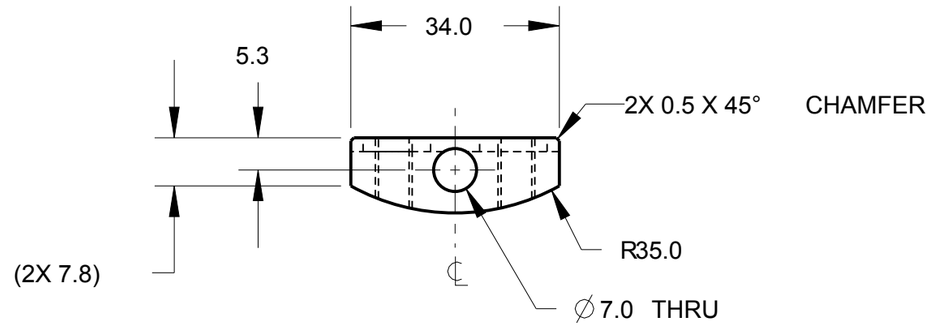

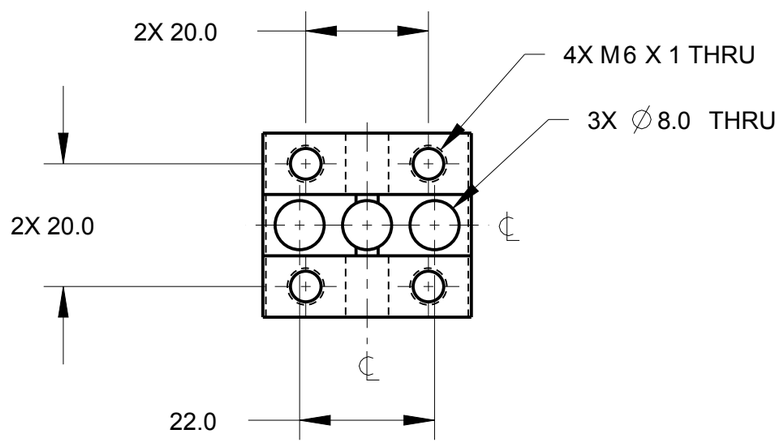

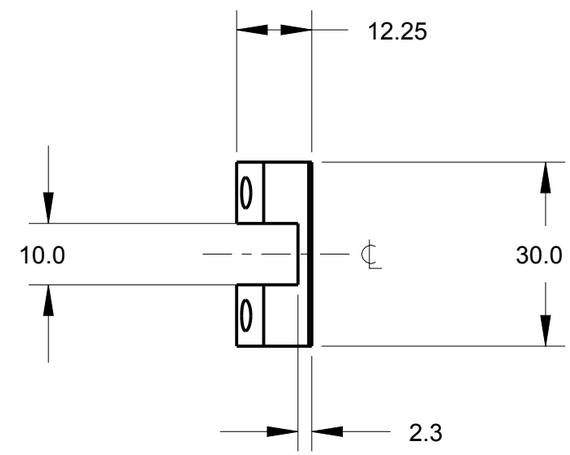

These FlexPLI lower legform drawings are the property of Humanetics, publically available through the UNECE website (www.unece.org, see document GTR9-9-11), and are being provided to NHTSA under agreement for the purpose of evaluation. Except for review and comment by the public, these drawings shall not be copied or used for any other purpose.

NOTES:

1. MATERIAL: MAGNESIUM/ALUMINUM ALLOY AZ31
2. FINISH PARTS WITH PROTECTIVE COATING.

ITEM NO.	QTY	PART NO.	DESCRIPTION
133-5100	5	133-5000	
133-5500	7	133-5000	
NEXT ASSEMBLY	QTY	USED ON	

PART LIST

APPLICATION

UNLESS OTHERWISE SPECIFIED
DIMENSIONS ARE IN MILLIMETERS
TOLERANCES ARE:
DECIMALS: ANGLES: MACHINED:
X ± 0.5 ±0.5 °
X.X ± 0.1
X.XX ± 0.05
ASME Y14.5M - 1994
DO NOT SCALE DRAWING

1.6

STANDARD BUILD LEVEL: N/A

THIRD ANGLE PROJECTION

	APPROVALS	DATE
MATERIAL SEE NOTES	DRAWN MJB	09-Feb-16
HEAT TREAT	CHECKED	
FINISH SEE NOTES	PROD. ENG.	

DRAWING COURTESY OF:

HUMANETICS Innovative Solutions

FOR ADDITIONAL INFORMATION VISIT OUR WEBSITE: WWW.HUMANETICSATD.COM

SPACER, BONE CONTACT, THIN

SIZE	DWG NO.	REV
A3	133-5507	B

SCALE 1.000 SHEET 1 OF 1

FORMAT: SHEET-A3 REV - A DOCUMENT 1 OF 2

Copyright 2016 Humanetics Innovative Solutions, Inc.

PRO/ENGINEER