REVISIONS				
ECO/ECR#	REV.	DESCRIPTION	DATE	CHANGED BY
	A			

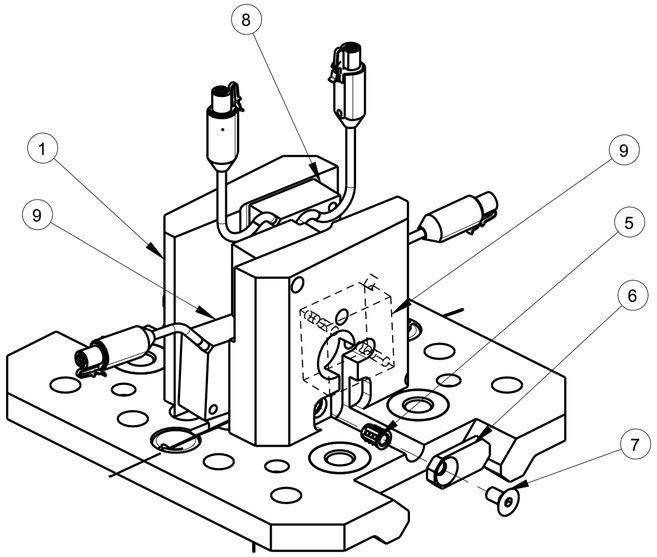

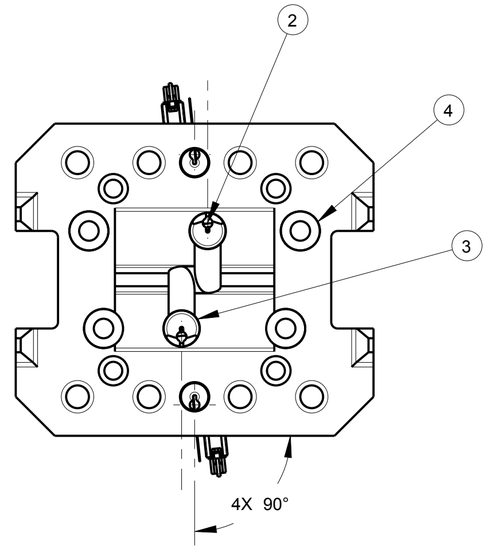

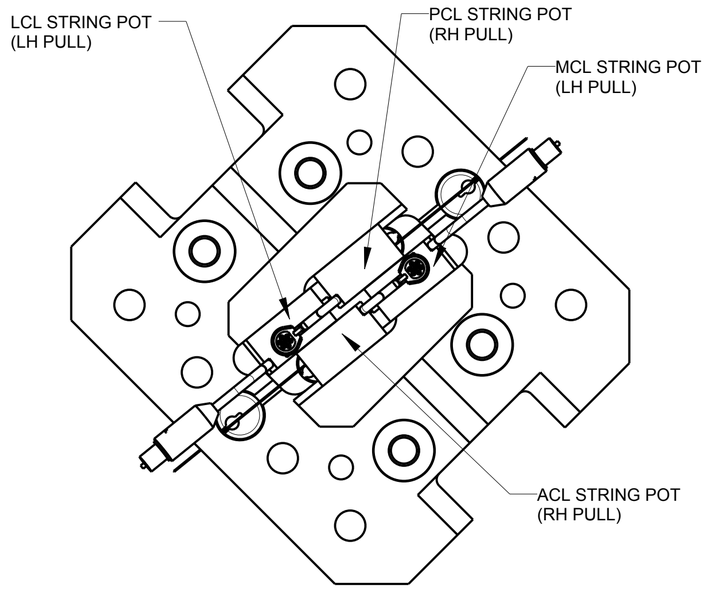

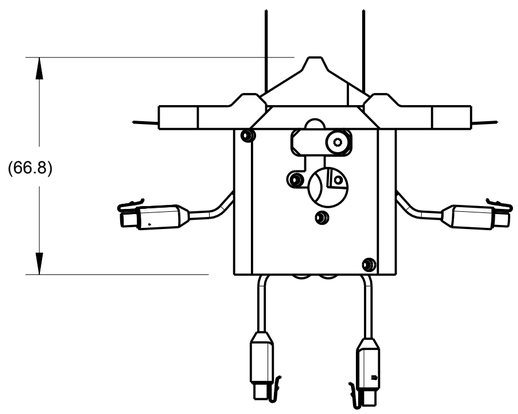

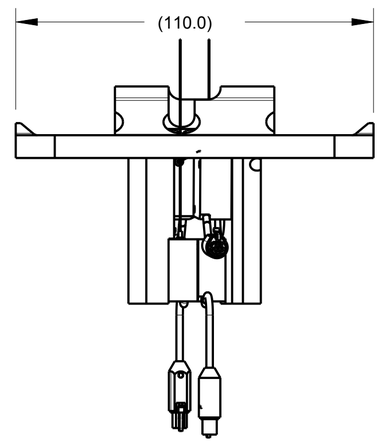

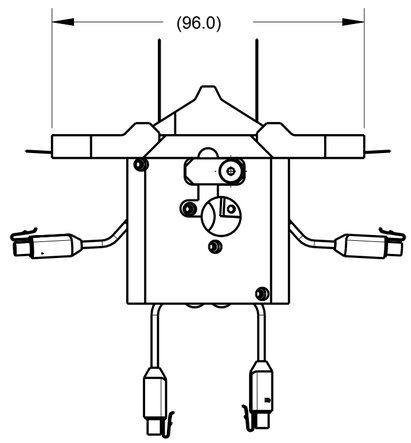

STRING POT LIGAMENT
INDENTIFICATION

These FlexPLI lower legform drawings are the property of Humanetics, publically available through the UNECE website (www.unece.org, see document GTR9-9-11), and are being provided to NHTSA under agreement for the purpose of evaluation. Except for review and comment by the public, these drawings shall not be copied or used for any other purpose.

ITEM NO.	QTY	PART NO.	DESCRIPTION
9	2	61-507-05-01-00	CABLE ASSEMBLY, LEFT STRING POT TO 7 PIN MALE W/LATCH, 150mm
8	2	61-503-05-01-00	CABLE ASSEMBLY, RIGHT STRING POT TO 7 PIN MALE W/LATCH, 150mm
7	2	5000098	SCREW, FHCS M3 X 0.5 X 6
6	2	133-5308	WIRE RETAINER, KNEE
5	2	5000811	M3 X .5 X 5.6 METAL INSERT
4	4	133-5309	STRING GUIDE, AP LIGAMENT
3	2	133-5307	STRING GUIDE, AP
2	2	133-5303	STRING GUIDE, KNEE
1	1	133-5301	MENISCUS PLATE

PART LIST

UNLESS OTHERWISE SPECIFIED
DIMENSIONS ARE IN MILLIMETERS
TOLERANCES ARE:
DECIMALS: ANGLES: MACHINED:
X.± 0.5 ±0.5 ° 1.6
X.X ± 0.1
X.XX ± 0.05
ASME Y14.5M - 1994
DO NOT SCALE DRAWING

STANDARD BUILD LEVEL: NA
THIRD ANGLE PROJECTION

DRAWING COURTESY OF:
HUMANETICS Innovative Solutions
FOR ADDITIONAL INFORMATION VISIT OUR WEBSITE: WWW.HUMANETICSATD.COM

APPROVALS	DATE
DRAWN B. KIMES	08-Feb-16
CHECKED	
PROD. ENG.	

MATERIAL
HEAT TREAT.
FINISH

MENISCUS ASSEMBLY

SIZE A2 | DWG NO. 133-5313 | REV A
SCALE 0.750 | SHEET 1 OF 1

NEXT ASSEMBLY	QTY	USED ON
133-5300	1	133-5000

APPLICATION

TQC TOTAL QUALITY CHECK

FORMAT: SHEET A2 REV.- A DOCUMENT 1 OF 2

Copyright 2016 Humanetics Innovative Solutions, Inc.

PRO/ENGINEER