REVISIONS				
ECO/ECR#	REV.	DESCRIPTION	DATE	CHANGED BY
	A			

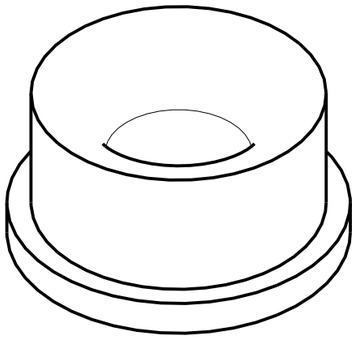

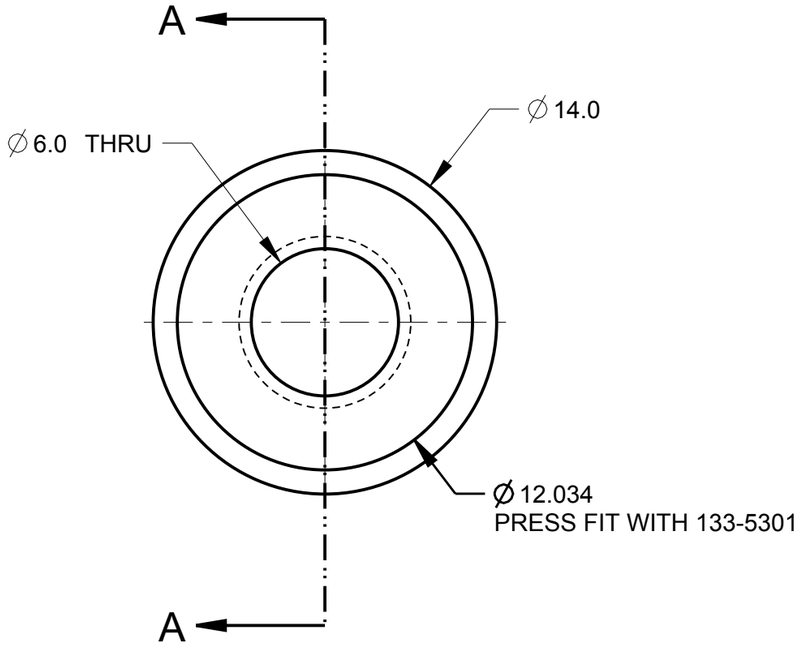

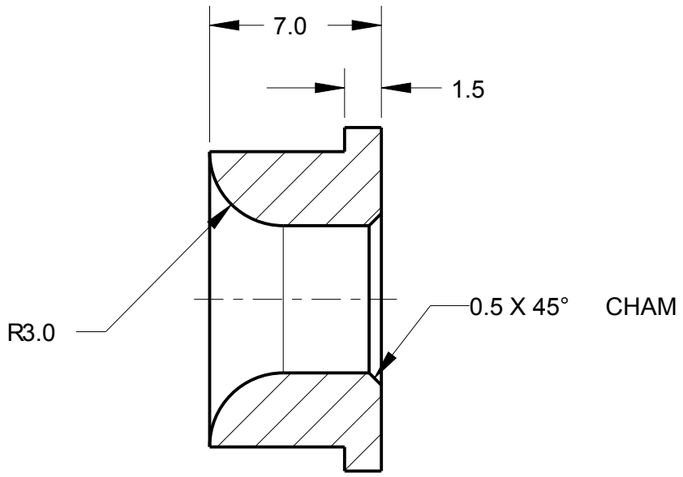

SECTION A-A

These FlexPLI lower legform drawings are the property of Humanetics, publically available through the UNECE website (www.unece.org, see document GTR9-9-11), and are being provided to NHTSA under agreement for the purpose of evaluation. Except for review and comment by the public, these drawings shall not be copied or used for any other purpose.

ITEM NO.	QTY	PART NO.	DESCRIPTION

PART LIST

NEXT ASSEMBLY	QTY	USED ON
133-5300	4	133-5000

APPLICATION

UNLESS OTHERWISE SPECIFIED DIMENSIONS ARE IN MILLIMETERS
TOLERANCES ARE:
DECIMALS: X ± 0.5, X.X ± 0.1, X.XX ± 0.05
ANGLES: ±0.5 °
MACHINED: 1.6
ASME Y14.5M - 1994
DO NOT SCALE DRAWING

STANDARD: BUILD LEVEL: NA

THIRD ANGLE PROJECTION

APPROVALS	DATE
DRAWN MJB	08-Feb-16
CHECKED	
PROD. ENG.	

MATERIAL: PHOSPHOR BRONZE
HEAT TREAT
FINISH

DRAWING COURTESY OF:
HUMANETICS Innovative Solutions
FOR ADDITIONAL INFORMATION VISIT OUR WEBSITE: WWW.HUMANETICSATD.COM

STRING GUIDE, AP LIGAMENT

SIZE A3 | DWG NO. 133-5309 | REV A
SCALE 4.000 | SHEET 1 OF 1

FORMAT: SHEET-A3 REV.: A DOCUMENT 1 OF 2

Copyright 2016 Humanetics Innovative Solutions, Inc.

PRO/ENGINEER