REVISIONS				
ECO/ECR#	REV.	DESCRIPTION	DATE	CHANGED BY
	A			

PART NO.	CABLE LENGTH "XX" (mm)	COMMENTS
61-507-05-01-00	150	

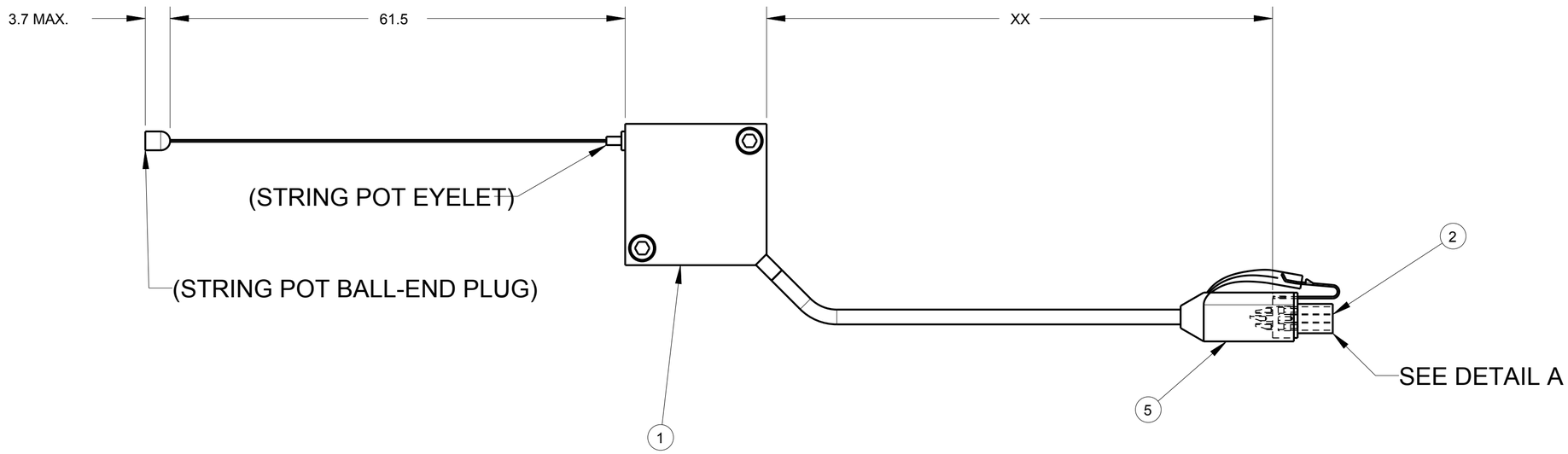

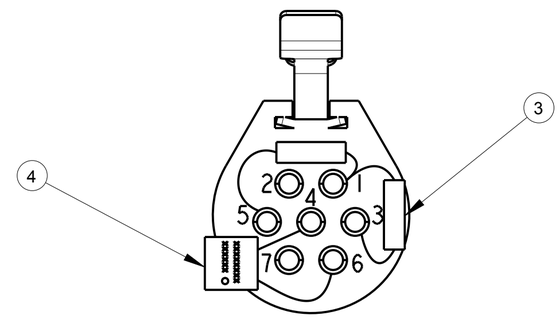

CONNECTOR DETAIL
VIEW ON SOLDER PINS

PIN	FUNCTION
1	+SIG
2	-SIG
3	+EXC
4	+ID
5	-EXC
6	-ID

These FlexPLI lower legform drawings are the property of Humanetics, publically available through the UNECE website (www.unece.org, see document GTR9-9-11), and are being provided to NHTSA under agreement for the purpose of evaluation. Except for review and comment by the public, these drawings shall not be copied or used for any other purpose.

ITEM NO.	QTY	PART NO.	DESCRIPTION
5	1	734-2007	BACKSHELL, 7 PIN CIRCULAR MALE W/LATCH
4	1	6002366	ID CHIP
3	2	6002249	COMPLETION RESISTOR
2	1	6002635	CONNECTOR, 7 PIN CIRCULAR MALE W/LATCH
1	1	6002540	STRING POT (#150-0121-L2N)

PART LIST

TQC	NEXT ASSEMBLY	QTY	USED ON
TOTAL QUALITY CHECK	133-5313	2	133-5000
	APPLICATION		

UNLESS OTHERWISE SPECIFIED DIMENSIONS ARE IN MILLIMETERS
TOLERANCES ARE:
DECIMALS: ANGLES: MACHINED:
X.X ± 0.5 ±0.5 ° 1.6
X.X ± 0.1
X.XX ± 0.05
ASME Y14.5M - 1994
DO NOT SCALE DRAWING

MATERIAL
HEAT TREAT.
FINISH

STANDARD BUILD LEVEL: NA
THIRD ANGLE PROJECTION

APPROVALS	DATE
DRAWN J. MCINNIS	10-Feb-16
CHECKED	
PROD. ENG.	

DRAWING COURTESY OF:
HUMANETICS Innovative Solutions
FOR ADDITIONAL INFORMATION VISIT OUR WEBSITE: WWW.HUMANETICSATD.COM

CABLE ASSY, LEFT STRING POT

SIZE A2 | DWG NO. 61-507-05-00-00 | REV A
SCALE 2.000 | SHEET 1 OF 1

FORMAT: SHEETA2 REV - A DOCUMENT 1 OF 2

Copyright 2016 Humanetics Innovative Solutions, Inc.

PRO/ENGINEER