REVISIONS				
ECO/ECR#	REV.	DESCRIPTION	DATE	CHANGED BY
	A			

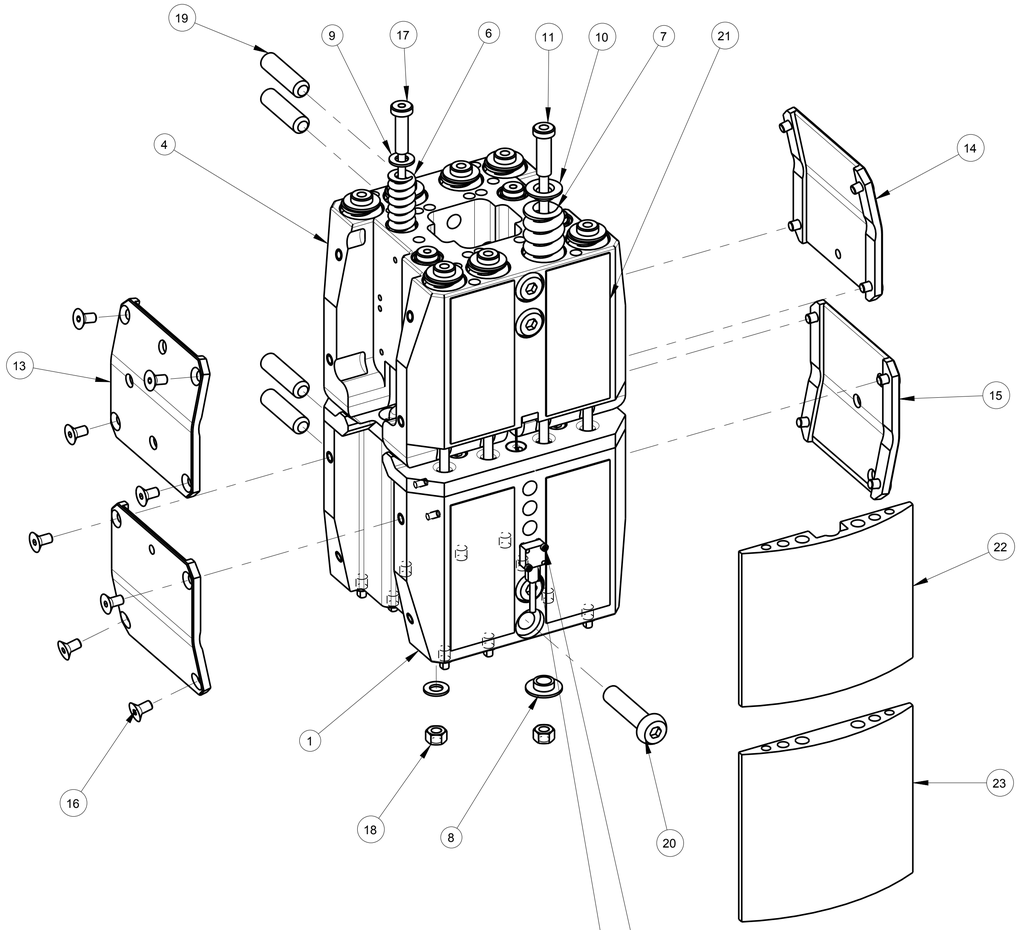

(SCREW, SHCS M1.6 X 0.35 X 8)

(ACCELEROMETER)

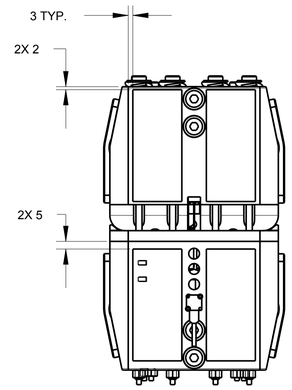

VIEW Z
TAPE APPLICATION
SCALE 0.500

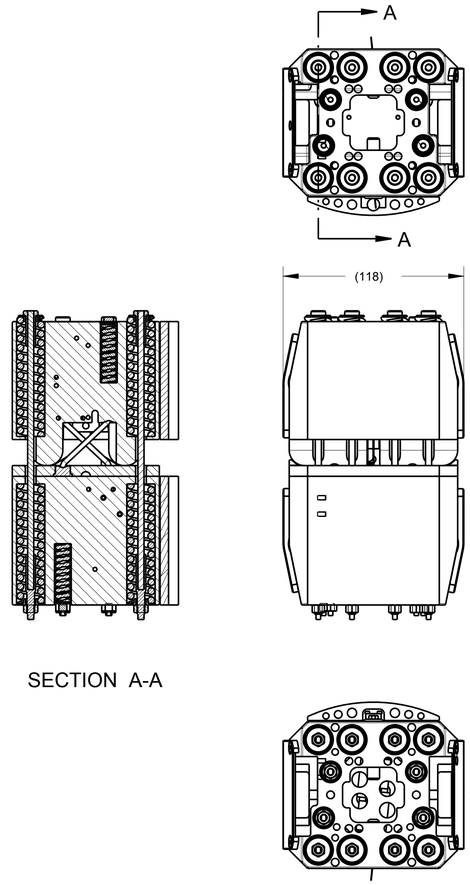

SECTION A-A

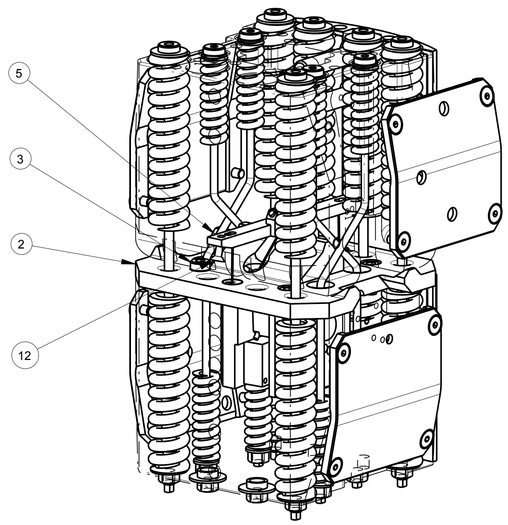

PHANTOM VIEW
TO SHOW
COMPONENTS

ITEM NO.	QTY	PART NO.	DESCRIPTION
23	1	133-5305	COVER, LOWER KNEE, FLEX PLI
22	1	133-5304	COVER, UPPER KNEE, FLEX PLI
21	4	133-5018	TAPE, FRONT COVER
20	4	5000850	SCREW, BHCS M8 X 1.25 X 35, ZINC PLATED
19	4	5000770	SCREW, MSSFP M8 X 30
18	12	5000522	HEX NUT, M5 X 0.8 NYLOK
17	4	133-5360	AP CABLE ASSEMBLY
16	16	5000844	SCREW, FHCS M4 X 0.7 X 8, ZINC PLATED
15	1	133-5314	COVER, KNEE, TIBIA LEFT SIDE
14	2	133-5306	COVER, KNEE
13	1	133-5315	COVER, KNEE, FEMUR RIGHT SIDE
12	2	5000203	SCREW, FHCS M3 X 0.5 X 10
11	8	133-5350	CABLE ASSEMBLY, KNEE ML
10	8	133-5310	SPRING CAP
9	8	133-5311	CABLE WASHER
8	8	133-5318	SPRING CAP KNEE BLOCK TIBIA
7	16	9003158	SPRING, 18 X 80 (SR 76.7 N/mm)
6	8	9003159	SPRING, 12 X 40 (SR 71.0 N/mm)
5	1	133-5302	ATTACHMENT PLATE, STRING POT
4	1	133-5320	KNEE BLOCK, FEMUR
3	4	5000774	SCREW, SHCS M5 X .8 X 10, LOW HEAD
2	1	133-5313	MENISCUS ASSEMBLY
1	1	133-5330	KNEE BLOCK, TIBIA, FLEX PLI

PART LIST

These FlexPLI lower legform drawings are the property of Humanetics, publically available through the UNECE website (www.unece.org, see document GTR9-9-11), and are being provided to NHTSA under agreement for the purpose of evaluation. Except for review and comment by the public, these drawings shall not be copied or used for any other purpose.

UNLESS OTHERWISE SPECIFIED DIMENSIONS ARE IN MILLIMETERS
TOLERANCES ARE:
DECIMALS: ANGLES: MACHINED:
X ± 0.5 ±0.5 ° 1.6
X.X ± 0.1
X.XX ± 0.05
ASME Y14.5M - 1994
DO NOT SCALE DRAWING

STANDARD BUILD LEVEL:
THIRD ANGLE PROJECTION

APPROVALS	DATE
DRAWN BK	08-Feb-16
CHECKED ASB	
PROD. ENG ASB	

MATERIAL
HEAT TREAT.
FINISH

DRAWING COURTESY OF:
HUMANETICS Innovative Solutions
FOR ADDITIONAL INFORMATION VISIT OUR WEBSITE: WWW.HUMANETICSATD.COM

KNEE ASSEMBLY, FLEX PLI

SIZE	DWG NO.	REV
A1	133-5300	A

SCALE 0.500 SHEET 1 OF 1

TQC TOTAL QUALITY CHECK	NEXT ASSY	QTY	USED ON
	133-5000	1	133-5000
	APPLICATION		

FORMAT: SHEET-A1 REV: A DOCUMENT 1 OF 2

Copyright 2016 Humanetics Innovative Solutions, Inc.

PRO/ENGINEER