REVISIONS				
ECO/ECR#	REV.	DESCRIPTION	DATE	CHANGED BY
	A	RELEASE TO PRODUCTION		

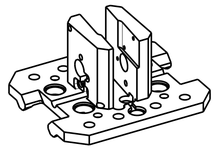

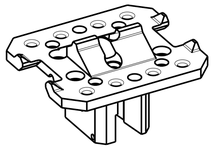

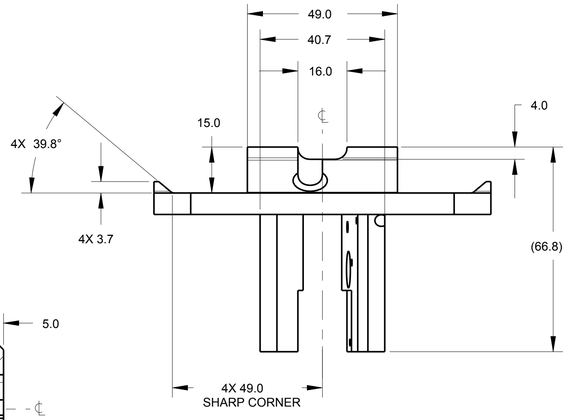

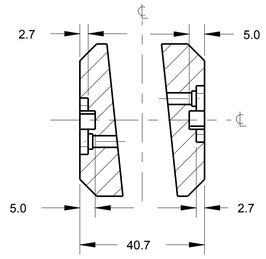

SECTION E-E

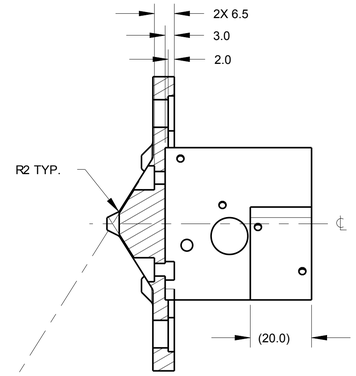

SECTION A-A

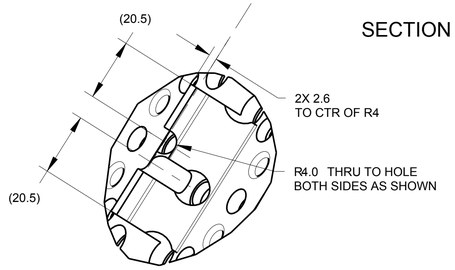

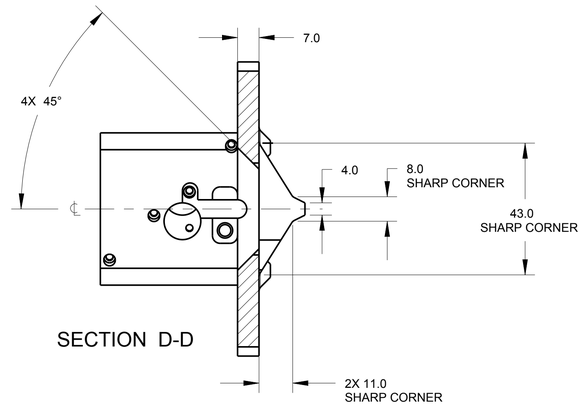

SECTION D-D

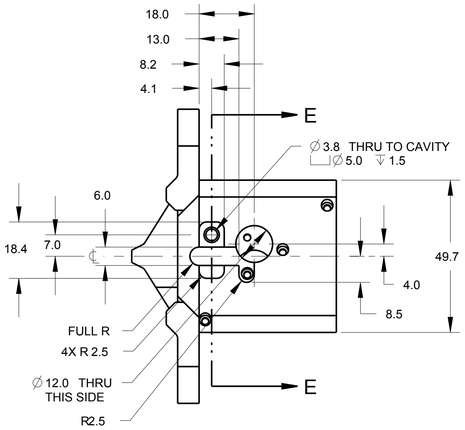

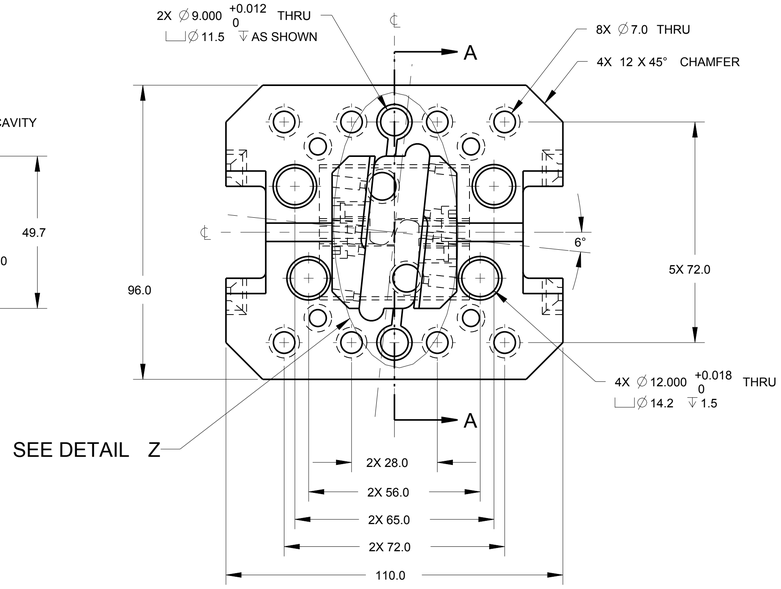

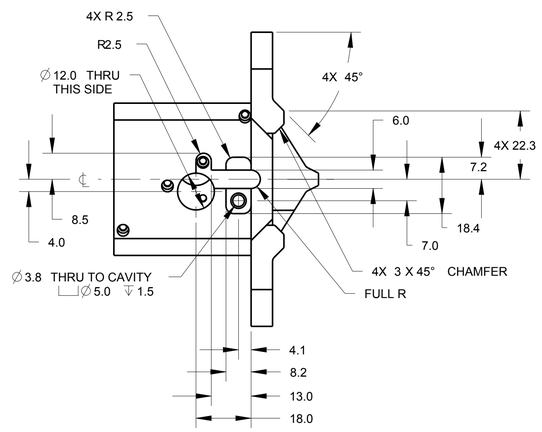

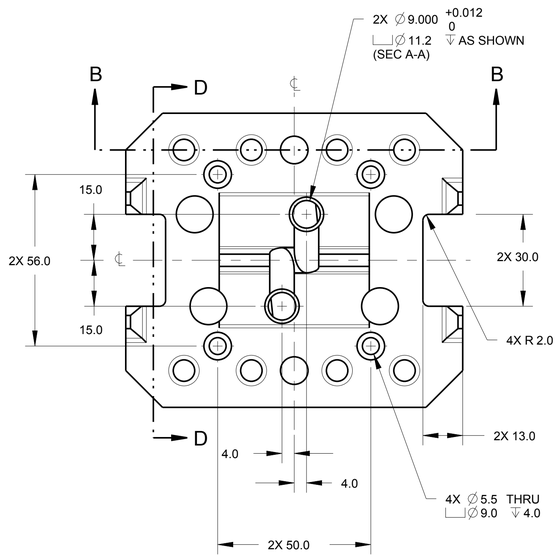

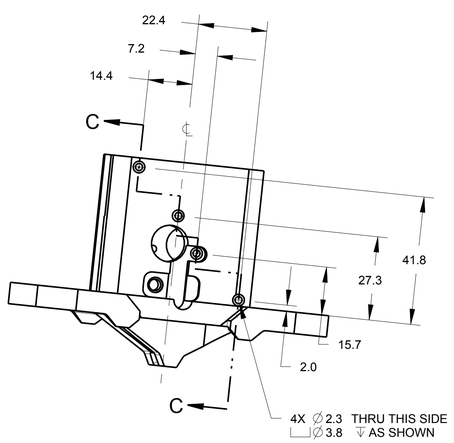

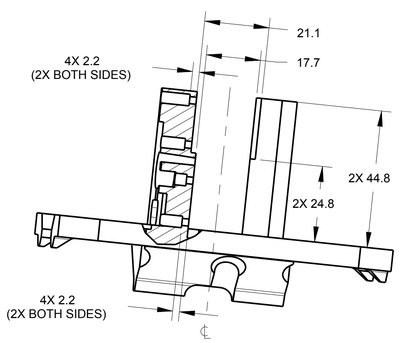

SECTION C-C
PARTIAL VIEW

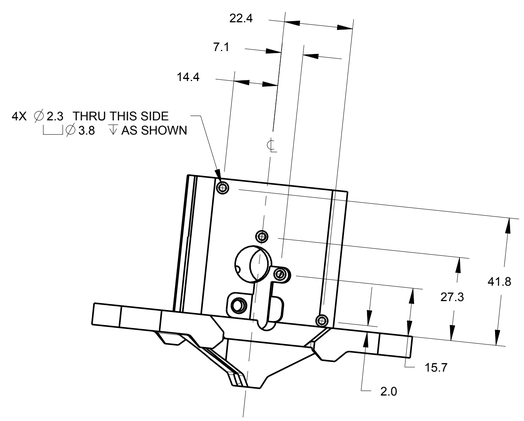

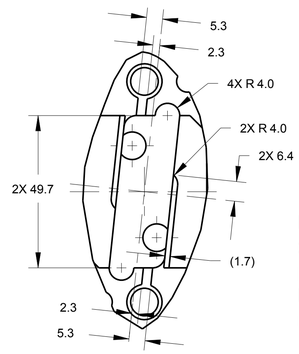

DETAIL Z
SCALE 1.000

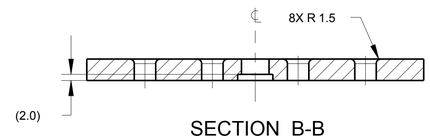

SECTION B-B

These FlexPLI lower legform drawings are the property of Humanetics, publically available through the UNECE website (www.unece.org, see document GTR9-9-11), and are being provided to NHTSA under agreement for the purpose of evaluation. Except for review and comment by the public, these drawings shall not be copied or used for any other purpose.

ITEM NO.	QTY	PART NO.	DESCRIPTION

PART LIST

TOTAL QUALITY CHECK	NEXT ASSY	QTY	USED ON
	133-5300	1	133-5000
	APPLICATION		

UNLESS OTHERWISE SPECIFIED DIMENSIONS ARE IN MILLIMETERS
TOLERANCES ARE:
DECIMALS: ANGLES: MACHINED:
X.x ± 0.5 ±0.5 ° 1.6
X.Xx ± 0.1
X.XX ± 0.05
ASME Y14.5M - 1994
DO NOT SCALE DRAWING

STANDARD BUILD LEVEL:
THIRD ANGLE PROJECTION

	APPROVALS	DATE
MATERIAL	MC901 NYLON	
DRAWN	MJB	08-Feb-16
HEAT TREAT.		
CHECKED		
FINISH		
PROD. ENG.		

DRAWING COURTESY OF:
HUMANETICS Innovative Solutions
FOR ADDITIONAL INFORMATION VISIT OUR WEBSITE: WWW.HUMANETICSATD.COM

MENISCUS PLATE

SIZE	DWG NO.	REV
A1	133-5301	A
SCALE 1.000	SHEET 1 OF 1	

FORMAT: SHEET A1 REV: A DOCUMENT 1 OF 2

Copyright 2016 Humanetics Innovative Solutions, Inc.

PRO/ENGINEER