REVISIONS				
ECO/ECR#	REV.	DESCRIPTION	DATE	CHANGED BY
	B	ITEM 12 WAS ITEM 13, ITEM 13 WAS ITEM 12	16/7/2014	MJB

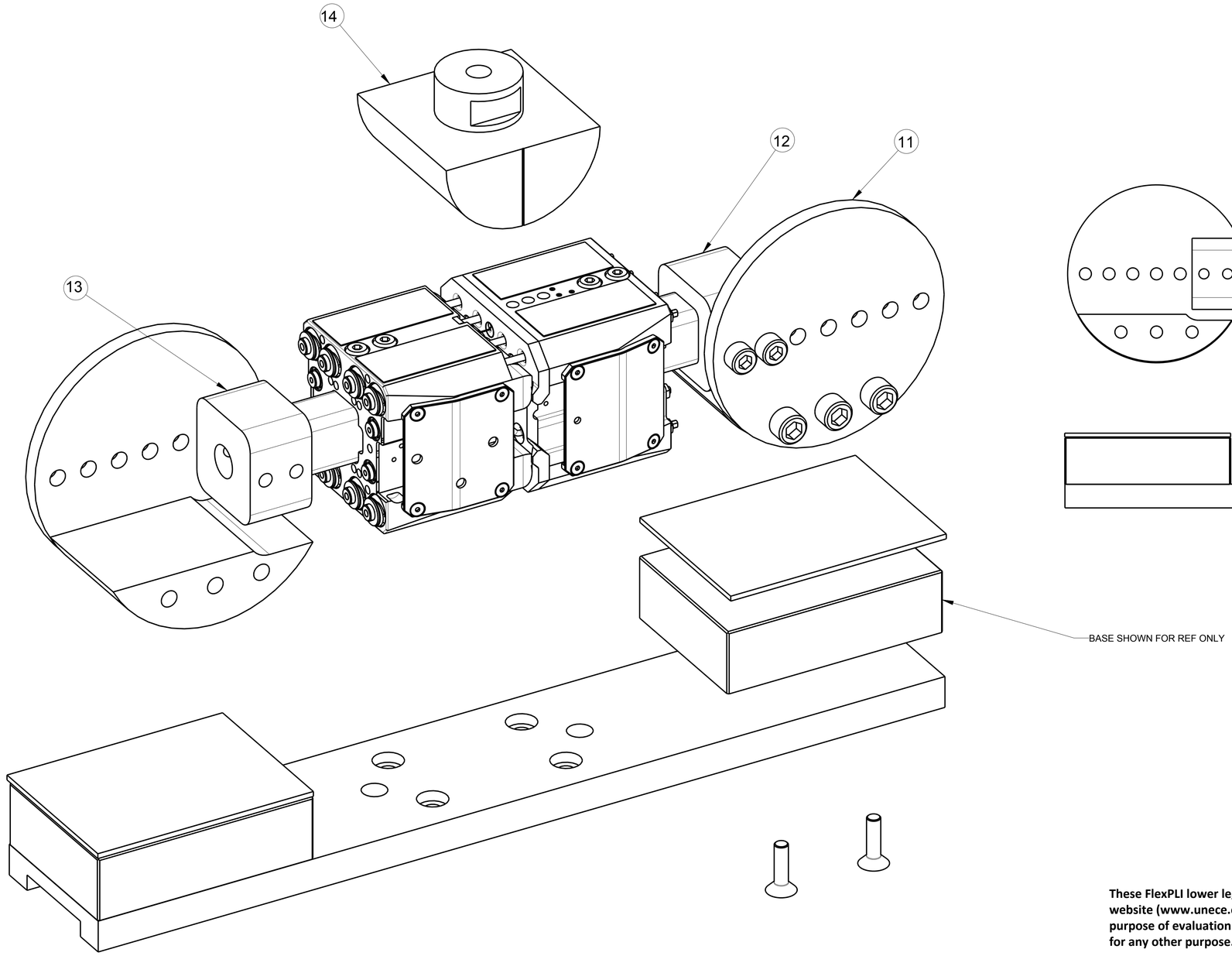

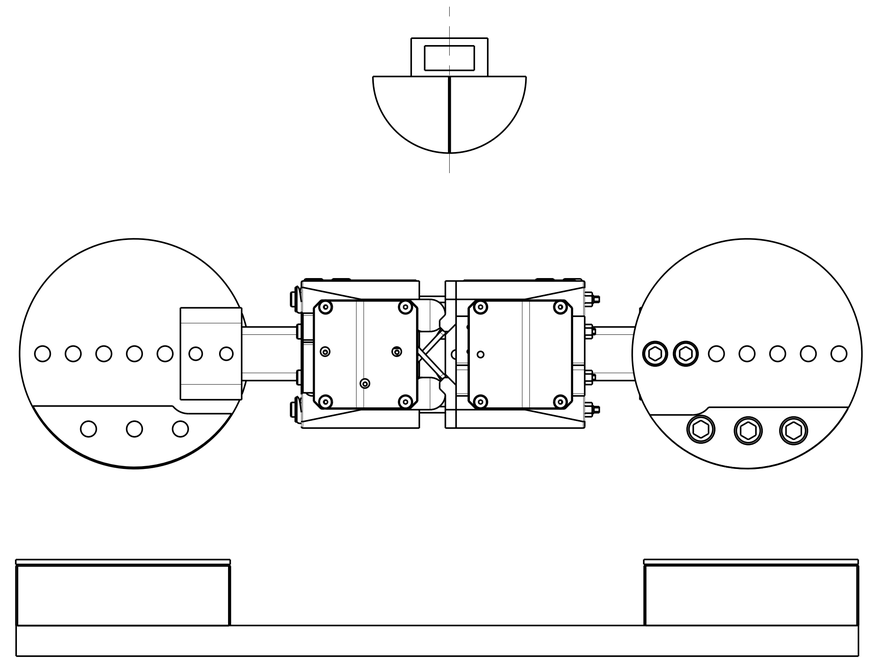

These FlexPLI lower legform drawings are the property of Humanetics, publically available through the UNECE website (www.unece.org, see document GTR9-9-11), and are being provided to NHTSA under agreement for the purpose of evaluation. Except for review and comment by the public, these drawings shall not be copied or used for any other purpose.

ITEM NO.	QTY	PART NO.	DESCRIPTION

PART LIST

UNLESS OTHERWISE SPECIFIED DIMENSIONS ARE IN MILLIMETERS
TOLERANCES ARE:
DECIMALS: ANGLES: MACHINED
X.x ± 0.5 ±0.5° 1.6
X.X ± 0.1
X.XX ± 0.05
ASME Y14.5M - 1994

DO NOT SCALE DRAWING

MATERIAL

HEAT TREAT.

FINISH

STANDARD BUILD LEVEL:

THIRD ANGLE PROJECTION

APPROVALS	DATE
DRAWN MJB	09-Feb-16
CHECKED	
PROD. ENG.	

DRAWING COURTESY OF:

HUMANETICS Innovative Solutions

FOR ADDITIONAL INFORMATION VISIT OUR WEBSITE: WWW.HUMANETICSATD.COM

BONE AND KNEE ASSY CAL FIXTURES

SIZE A1 | DWG NO. 133-8120 | REV B

SCALE 1.000 | SHEET 2 OF 2

TQC TOTAL QUALITY CHECK

NEXT ASSY	QTY	USED ON
APPLICATION		

FORMAT: SHEET A1 REV. A DOCUMENT 1 OF 2

PRO/ENGINEER

Copyright 2016 Humanetics Innovative Solutions, Inc.