REVISIONS				
ECO/ECR#	REV.	DESCRIPTION	DATE	CHANGED BY
	A			

These FlexPLI lower legform drawings are the property of Humanetics, publically available through the UNECE website (www.unece.org, see document GTR9-9-11), and are being provided to NHTSA under agreement for the purpose of evaluation. Except for review and comment by the public, these drawings shall not be copied or used for any other purpose.

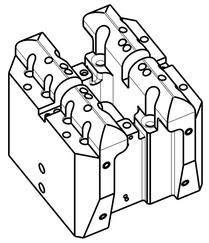

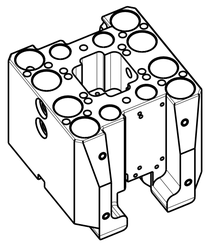

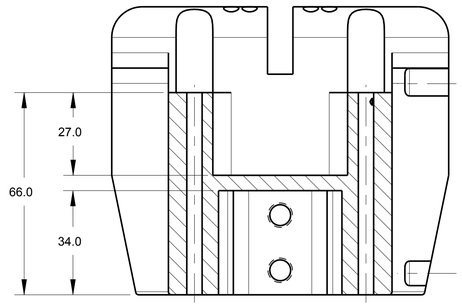

SECTION B-B

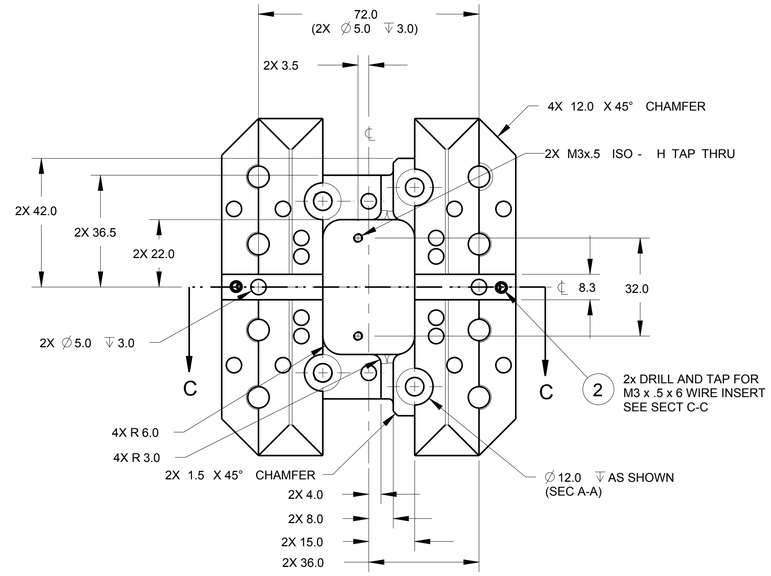

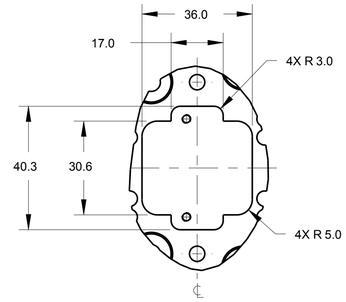

DETAIL A
SCALE 1.000

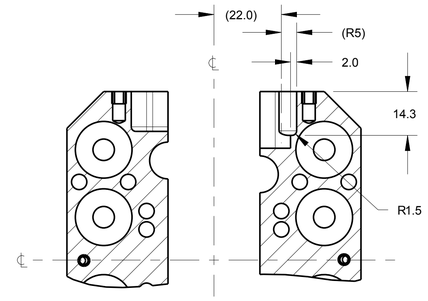

SECTION D-D
TYPICAL 2X SLOTS
(PARTIAL VIEW)

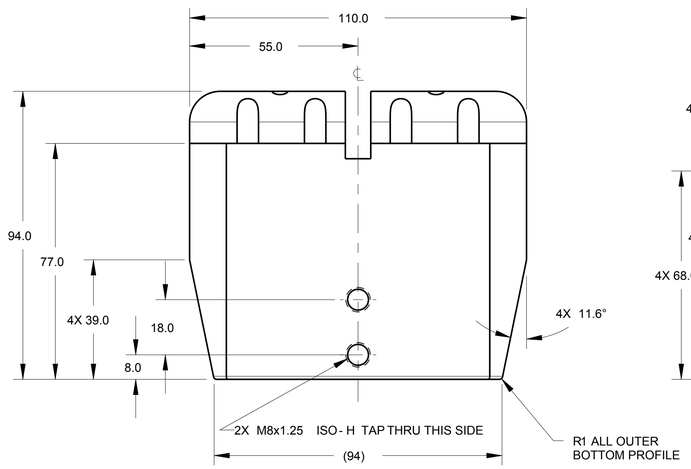

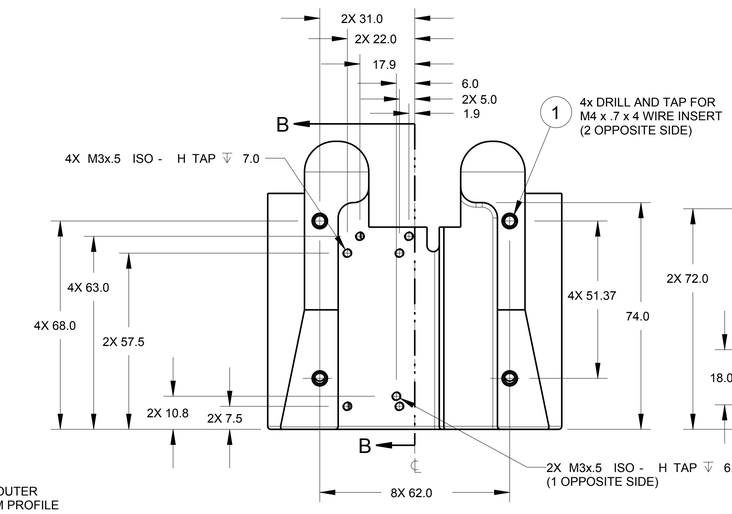

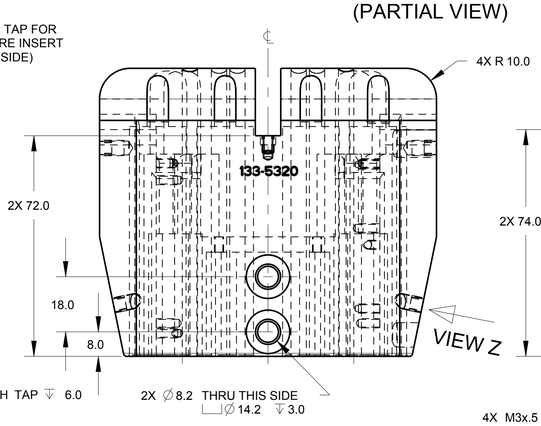

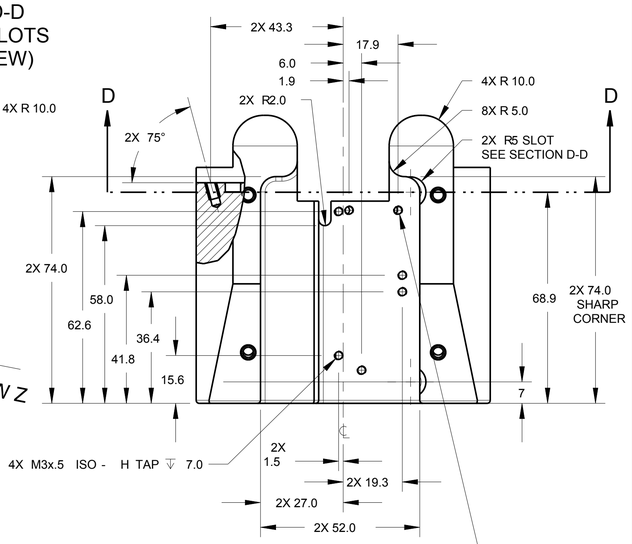

SECTION C-C
(PARTIAL VIEW)

4X M3x.5 ISO - H TAP ↧ 6.0
(2X OPPOSITE SIDE)

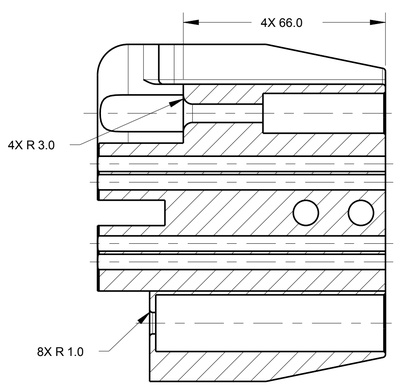

SECTION A-A

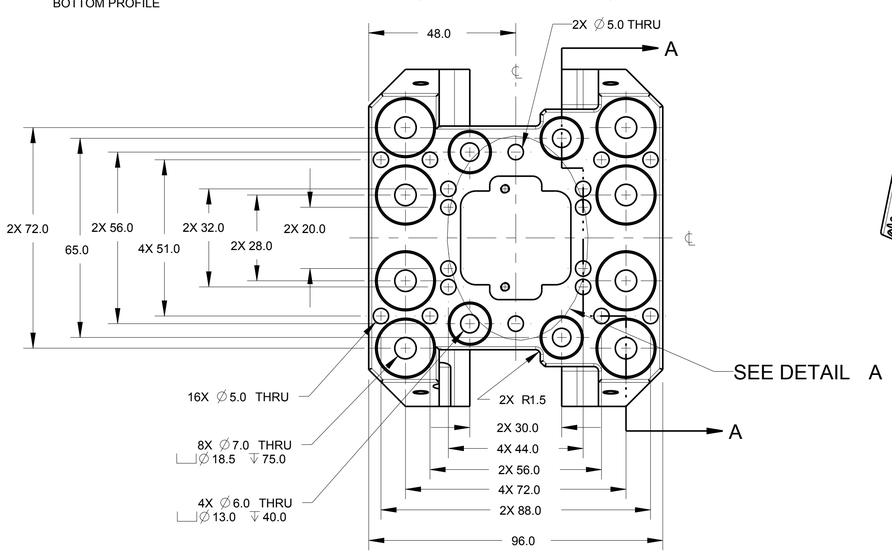

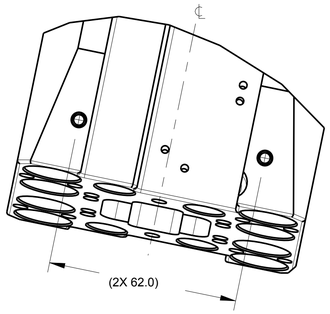

VIEW Z
(PARTIAL VIEW)

ITEM NO.	QTY	PART NO.	DESCRIPTION
2	2	5000333	WIRE INSERT, M3 X .5 X 6
1	8	5000352	WIRE INSERT, M4 X .7 X 4

PART LIST

NEXT ASSY	QTY	USED ON
133-5300	1	133-5000

APPLICATION

TQC TOTAL QUALITY CHECK

UNLESS OTHERWISE SPECIFIED DIMENSIONS ARE IN MILLIMETERS
TOLERANCES ARE:
DECIMALS: ANGLES: MACHINED:
X.x ± 0.5 ±0.5 °
X.Xx ± 0.1
X.XX ± 0.05
ASME Y14.5M - 1994

DO NOT SCALE DRAWING

MATERIAL 7075-T6 ALUMINUM
HEAT TREAT.
FINISH CLEAR ANODIZE

STANDARD NAVAIL BUILD LEVEL:
1.6
THIRD ANGLE PROJECTION

APPROVALS	DATE
DRAWN MJB	09-Feb-16
CHECKED	
PROD. ENG.	

DRAWING COURTESY OF:
HUMANETICS Innovative Solutions
FOR ADDITIONAL INFORMATION VISIT OUR WEBSITE: WWW.HUMANETICSATD.COM

KNEE BLOCK, FEMUR

SIZE A1 | DWG NO. 133-5320 | REV A
SCALE 1.000 | SHEET 1 OF 1

FORMAT: SHEET-A1 REV - A DOCUMENT 1 OF 2

PRO/ENGINEER

Copyright 2016 Humanetics Innovative Solutions, Inc.