REVISIONS				
ECO/ECR#	REV.	DESCRIPTION	DATE	CHANGED BY
	A			

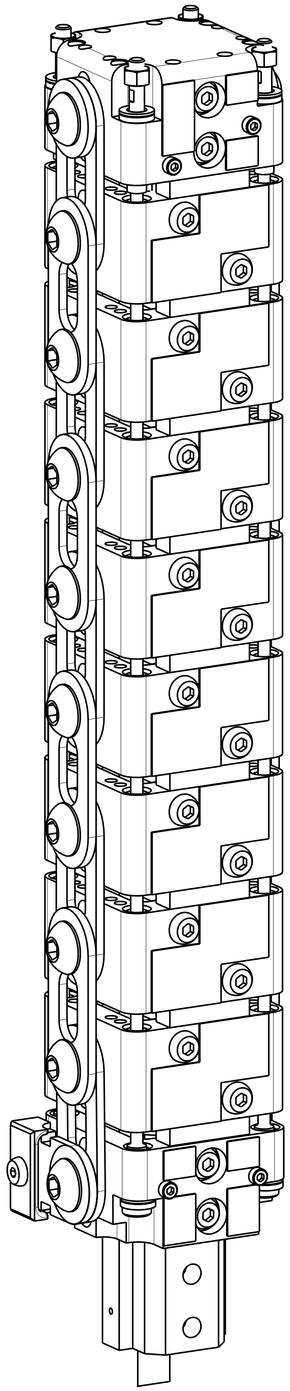

ISO VIEW
TAPE INSTALLATION
IMPACT SEGMENTS
REMOVED

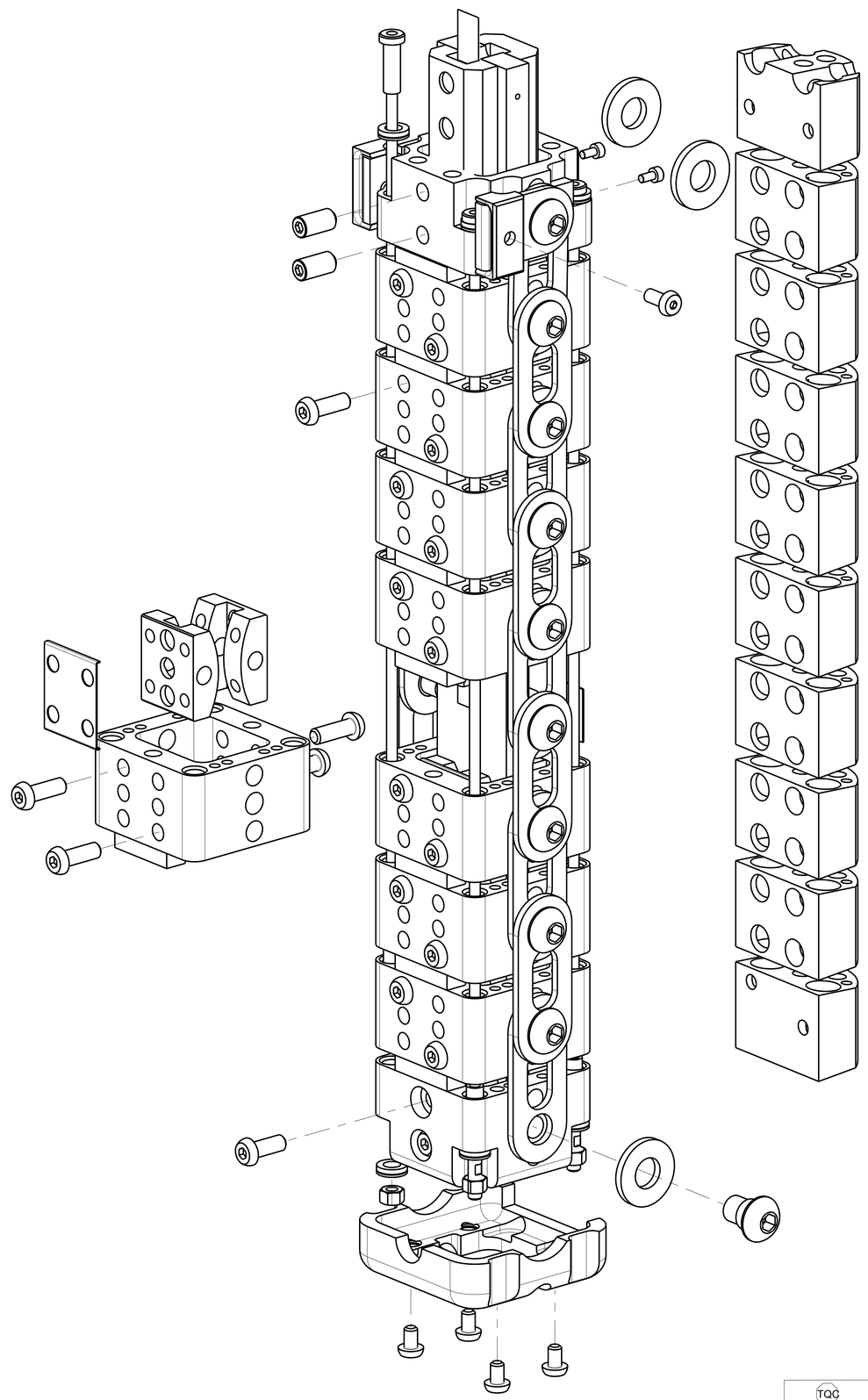

These FlexPLI lower legform drawings are the property of Humanetics, publically available through the UNECE website (www.unece.org, see document GTR9-9-11), and are being provided to NHTSA under agreement for the purpose of evaluation. Except for review and comment by the public, these drawings shall not be copied or used for any other purpose.

ITEM NO.	QTY	PART NO.	DESCRIPTION
46	7	133-5031	SHIM, .4 THICK (OPTIONAL) (NOT SHOWN)
45	7	133-5030	SHIM, .2 THICK (OPTIONAL) (NOT SHOWN)
44	7	133-5029	SHIM, .1 THICK (OPTIONAL) (NOT SHOWN)
43	2	6000045	CABLE TIE, 5/8" BUNDLE DIAMETER (NOT SHOWN)
42	2	5000846	SCREW, BHCS M5 X 0.8 X 12, ZINC PLATED
41	2	133-5523	WIRE EXIT CLAMP
40	2	133-5522	WIRE EXIT BASE
39	21	133-5012	SHIM, .05 (OPTIONAL) (NOT SHOWN)
38	7	133-5005	SHIM (T0-6) OPTIONAL (NOT SHOWN)
37	2	133-5004	SHIM, BONE CLAMP (T0-6) OPTIONAL (NOT SHOWN)
36	2	133-5003	SHIM, BONE CLAMP (T0-5) OPTIONAL (NOT SHOWN)
35	2	133-5002	SHIM, BONE CLAMP (T0-05) OPTIONAL (NOT SHOWN)
34	7	133-5001	SHIM, (T0-5) OPTIONAL (NOT SHOWN)
33	1	133-5518	COVER, END IMPACT
32	8	133-5517	IMPACT SEGMENT
31	1	133-5519	COVER, END IMPACT, (KNEE END)
30	2	133-5026	TAPE, END COVER, 12 X 16
29	4	133-5027	TAPE, END COVER, 10 X 12
28	1	133-5028	TAPE, END COVER, 12 X 24
27	8	133-5025	TAPE, IMPACT SEGMENT
26	2	5000769	SCREW, MSSFP M8 X 16
25	4	5000843	SCREW, SHCS M3 X 0.5 X 6, ZINC PLATED
24	4	5000845	SCREW, BHCS M5 X 0.8 X 8, ZINC PLATED
23	6	5000072	SCREW, BHCS M6 X 1 X 16
22	1	133-5516	END COVER
21	4	5000522	HEX NUT, M5 X 0.8 NYLOK
20	32	5000848	SCREW, BHCS M6 X 1 X 18, ZINC PLATED
19	4	133-5530	CABLE ASSEMBLY, TIBIA
18	8	133-5521	WASHER, CABLE
17	20	133-5106	SHOULDER BOLT
16	4	133-5104	WASHER, 12 ID X 26 OD X 3
15	18	133-5515	LINK
14	1	133-5514	INNER SEGMENT, KNEE
13	1	133-5535	INNER SEGMENT ASSEMBLY CLOSES TO KNEE
12	7	133-5534	INNER SEGMENT ASSEMBLY
11	1	133-5511	SEGMENT BOTTOM, TIBIA
10	1	133-5510	RUBBER BUFFER, FEMUR/TIBIA END
9	7	133-5509	SHIM (0.4 THICK) OPTIONAL
8	1	133-5508	BONE CLAMP THIN, KNEE
7	7	133-5507	SPACER, BONE CONTACT, THIN
6	1	133-5506	BONE CLAMP THICK, KNEE
5	7	133-5505	SPACER, BONE CONTACT, THICK
4	1	133-5504	SHIM, BONE CLAMP (.4 THICK) OPTIONAL
3	1	133-5503	BONE CLAMP THIN, FEMUR/TIBIA
2	1	133-5502	BONE CLAMP THICK, FEMUR/TIBIA
1	1	133-5565	PCB BONE ASSEMBLY, 4 CHANNEL TIBIA, TESTED & CERTIFIED

PART LIST

UNLESS OTHERWISE SPECIFIED
DIMENSIONS ARE IN MILLIMETERS
TOLERANCES ARE:
DECIMALS: ANGLES: MACHINED:
X.x ± 0.5 ±0.5 ° 1.6
X.X ± 0.1
X.XX ± 0.05
ASME Y14.5M - 1994
DO NOT SCALE DRAWING

STANDARD BUILD LEVEL:
THIRD ANGLE PROJECTION

APPROVALS	DATE
DRAWN ASB	09-Feb-16
CHECKED	
PROD. ENG.	

MATERIAL
HEAT TREAT.
FINISH

DRAWING COURTESY OF:
HUMANETICS Innovative Solutions
FOR ADDITIONAL INFORMATION VISIT OUR WEBSITE: WWW.HUMANETICSATD.COM

TIBIA ASSEMBLY, FLEX PLI

SIZE A1 | DWG NO. 133-5500 | REV A
SCALE 0.750 | SHEET 1 OF 2

TQC TOTAL QUALITY CHECK

NEXT ASSY	QTY	USED ON
133-5000	1	133-5000

APPLICATION

FORMAT: SHEET A1 REV - A DOCUMENT 1 OF 2

PRO/ENGINEER

Copyright 2016 Humanetics Innovative Solutions, Inc.

REVISIONS				
ECO/ECR#	REV.	DESCRIPTION	DATE	CHANGED BY
	A			

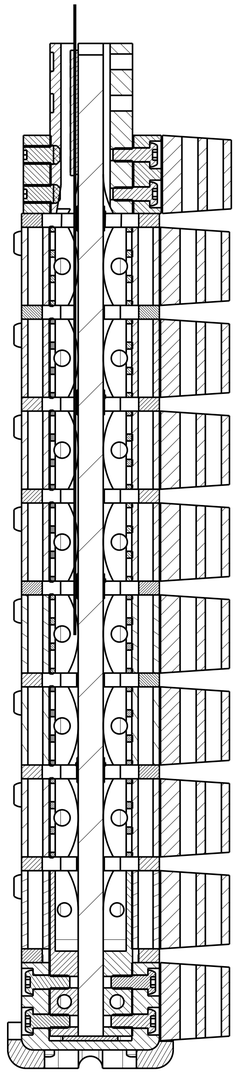

SECTION A-A
(SOME COMPONENTS NOT SHOWN)

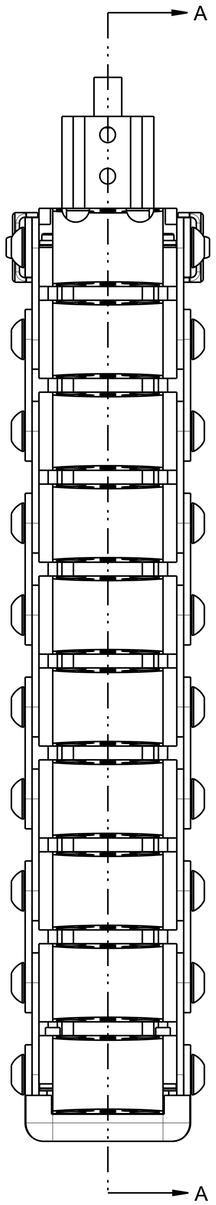

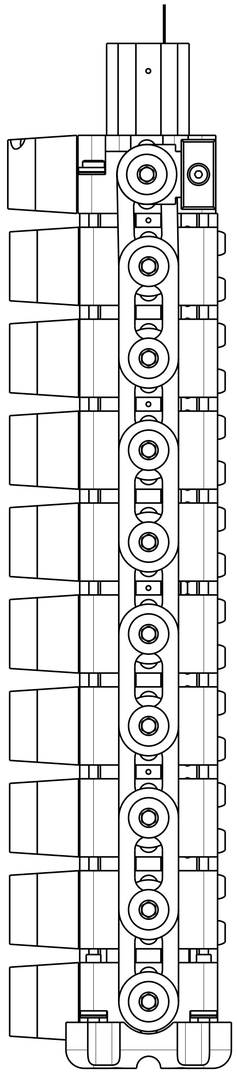

ITEM NO.	QTY	PART NO.	DESCRIPTION
			PART LIST

133-5000	1	133-5000	
NEXT ASSY	QTY	USED ON	
APPLICATION			

TQC
TOTAL QUALITY CHECK

UNLESS OTHERWISE SPECIFIED
DIMENSIONS ARE IN MILLIMETERS
TOLERANCES ARE:
DECIMALS: ANGLES: MACHINED:
X.x ± 0.5 ±0.5 ° 1.6
X.Xx ± 0.1
X.XX ± 0.05
ASME Y14.5M - 1994
DO NOT SCALE DRAWING

MATERIAL
HEAT TREAT.
FINISH

STANDARD: BUILD LEVEL:
THIRD ANGLE PROJECTION

APPROVALS	DATE
DRAWN ASB	09-Feb-16
CHECKED	
PROD. ENG.	

DRAWING COURTESY OF:
HUMANETICS Innovative Solutions
FOR ADDITIONAL INFORMATION VISIT OUR WEBSITE: WWW.HUMANETICSATD.COM

TIBIA ASSEMBLY, FLEX PLI

SIZE	DWG NO.	REV
A1	133-5500	A
SCALE: 0.750	SHEET 2 OF 2	

FORMAT: SHEET-A1 REV. A DOCUMENT 1 OF 2

Copyright 2016 Humanetics Innovative Solutions, Inc.

PRO/ENGINEER