REVISIONS				
ECO/ECR#	REV.	DESCRIPTION	DATE	CHANGED BY
	A			

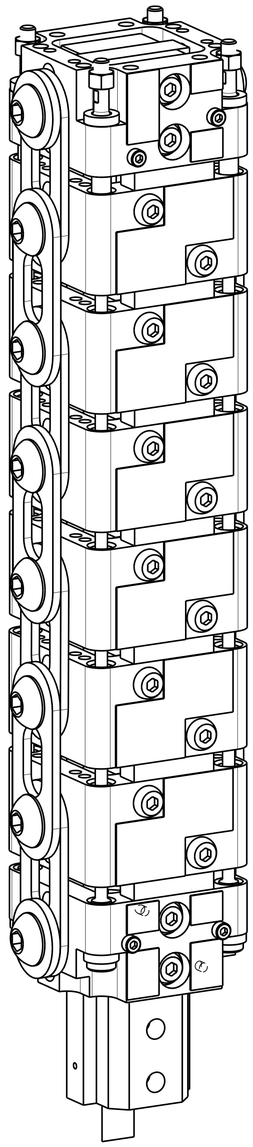

VIEW SHOWING
TAPE INSTALATION
SOME COMPONENTS NOT SHOWN

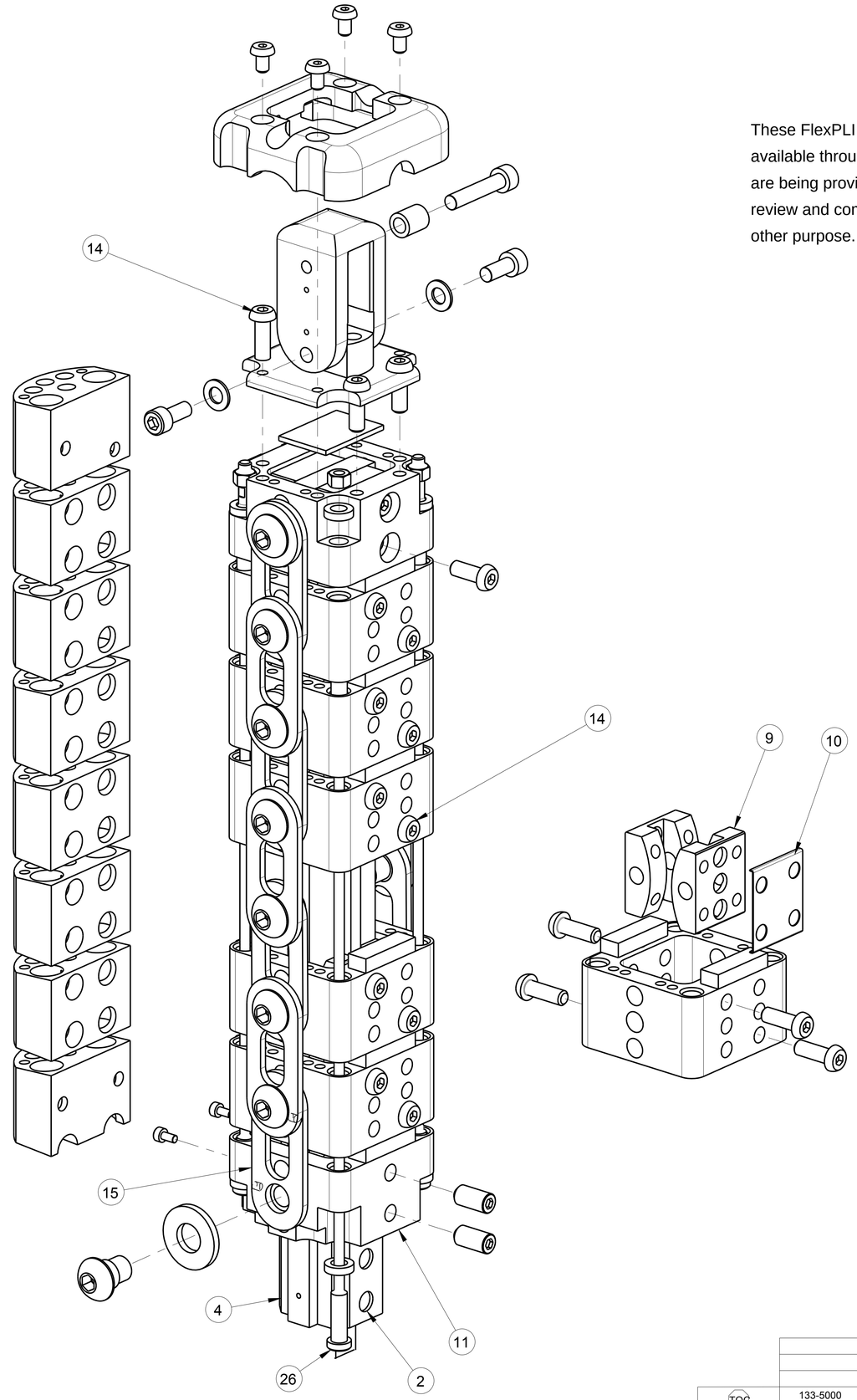

These FlexPLI lower legform drawings are the property of Humanetics, publically available through the UNECE website (www.unece.org, see document GTR9-9-11), and are being provided to NHTSA under agreement for the purpose of evaluation. Except for review and comment by the public, these drawings shall not be copied or used for any other purpose.

ITEM NO.	QTY	PART NO.	DESCRIPTION
49	5	133-5031	SHIM, .4 THICK (OPTIONAL) (NOT SHOWN)
48	5	133-5030	SHIM, .2 THICK (OPTIONAL) (NOT SHOWN)
47	5	133-5029	SHIM, .1 THICK (OPTIONAL) (NOT SHOWN)
46	2	6000045	CABLE TIE, 5/8" BUNDLE DIAMETER (NOT SHOWN)
45	15	133-5012	SHIM, .05 (OPTIONAL) (NOT SHOWN)
44	5	133-5005	SHIM (T0-6) OPTIONAL (NOT SHOWN)
43	2	133-5004	SHIM, BONE CLAMP (T0-6) OPTIONAL (NOT SHOWN)
42	2	133-5003	SHIM, BONE CLAMP (T0-5) OPTIONAL (NOT SHOWN)
41	2	133-5002	SHIM, BONE CLAMP (T0-05) OPTIONAL (NOT SHOWN)
40	5	133-5001	SHIM, (T0-5) OPTIONAL (NOT SHOWN)
39	6	133-5517	IMPACT SEGMENT
38	1	133-5519	COVER, END IMPACT, (KNEE END)
37	1	133-5518	COVER, END IMPACT
36	2	133-5026	TAPE, END COVER, 12 X 16
35	4	133-5027	TAPE, END COVER, 10 X 12
34	1	133-5028	TAPE, END COVER, 12 X 24
33	6	133-5025	TAPE, IMPACT SEGMENT
32	2	5000769	SCREW, MSSFP M8 X 16
31	4	5000843	SCREW, SHCS M3 X 0.5 X 6, ZINC PLATED
30	4	5000845	SCREW, BHCS M5 X 0.8 X 8, ZINC PLATED
29	6	5000072	SCREW, BHCS M6 X 1 X 16
28	1	133-5516	END COVER
27	4	5000522	HEX NUT, M5 X 0.8 NYLOK
26	4	133-5110	CABLE ASSEMBLY, FEMUR
25	8	133-5521	WASHER, CABLE
24	1	133-5107	ROLLER
23	1	5000849	SCREW, SHCS M6 X 1 X 30, ZINC PLATED
22	2	5000847	SCREW, SHCS M6 X 1 X 14, ZINC PLATED
21	2	5000094	WASHER, FLAT M6 (6.7 ID X 12.5 OD X 1.0 THICK)
20	16	133-5106	SHOULDER BOLT
19	4	133-5104	WASHER, 12 ID X 26 OD X 3
18	1	133-5103	LAUNCH GUIDE
17	1	133-5102	PLATE, TOP
16	1	133-5108	SEGMENT TOP, FEMUR
15	14	133-5515	LINK
14	28	5000848	SCREW, BHCS M6 X 1 X 18, ZINC PLATED
13	5	133-5534	INNER SEGMENT ASSEMBLY
12	1	133-5535	INNER SEGMENT ASSY CLOSES TO KNEE
11	1	133-5514	INNER SEGMENT, KNEE
10	5	133-5509	SHIM (0.4 THICK) OPTIONAL
9	5	133-5507	SPACER, BONE CONTACT, THIN
8	1	133-5510	RUBBER BUFFER, FEMUR/TIBIA END
7	1	133-5504	SHIM, BONE CLAMP (.4 THICK) OPTIONAL
6	5	133-5505	SPACER, BONE CONTACT, THICK
5	1	133-5502	BONE CLAMP THICK, FEMUR/TIBIA
4	1	133-5506	BONE CLAMP THICK, KNEE
3	1	133-5503	BONE CLAMP THIN, FEMUR/TIBIA
2	1	133-5508	BONE CLAMP THIN, KNEE
1	1	133-5165	PCB BONE ASSEMBLY, FEMUR

PART LIST

UNLESS OTHERWISE SPECIFIED DIMENSIONS ARE IN MILLIMETERS
TOLERANCES ARE:
DECIMALS: ANGLES: MACHINED:
X.X ± 0.5 ±0.5 ° 1.6
X.XX ± 0.1
X.XXX ± 0.05
ASME Y14.5M - 1994

DO NOT SCALE DRAWING

STANDARD BUILD LEVEL:

THIRD ANGLE PROJECTION

DRAWING COURTESY OF:

HUMANETICS Innovative Solutions
FOR ADDITIONAL INFORMATION VISIT OUR WEBSITE: WWW.HUMANETICSATD.COM

APPROVALS	DATE
DRAWN B. KIMES	05-Feb-16
CHECKED ASB	
PROD. ENG ASB	

FEMUR ASSEMBLY, FLEX PLI

MATERIAL
HEAT TREAT.
FINISH

NEXT ASSY	QTY	USED ON
133-5000	1	133-5000

APPLICATION

TQC TOTAL QUALITY CHECK

SIZE A1 | DWG NO. 133-5100 | REV A
SCALE 0.500 | SHEET 1 OF 2

FORMAT: SHEET-A1 REV. A DOCUMENT 1 OF 2

PRO/ENGINEER

Copyright 2016 Humanetics Innovative Solutions, Inc.