REVISIONS				
ECO/ECR#	REV.	DESCRIPTION	DATE	CHANGED BY
	A			

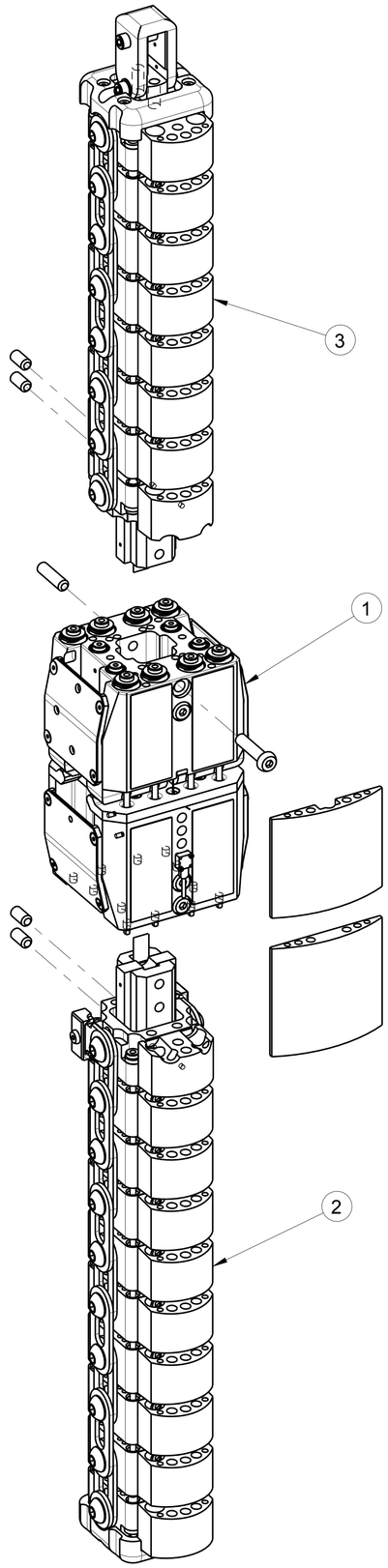

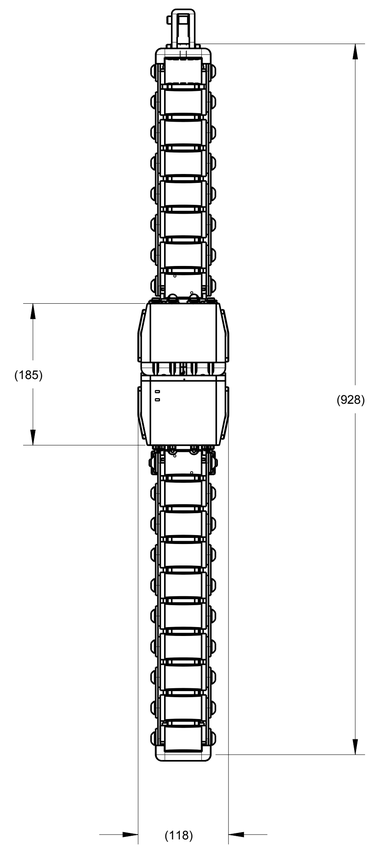

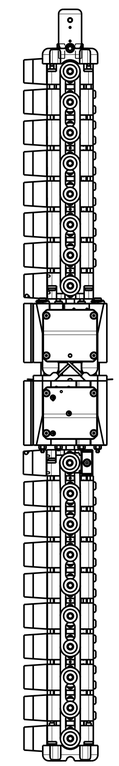

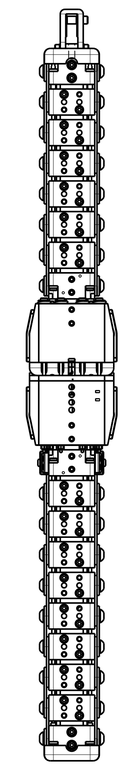

These FlexPLI lower legform drawings are the property of Humanetics, publically available through the UNECE website (www.unece.org, see document GTR9-9-11), and are being provided to NHTSA under agreement for the purpose of evaluation. Except for review and comment by the public, these drawings shall not be copied or used for any other purpose.

ITEM NO.	QTY	PART NO.	DESCRIPTION
10	6	133-5019	VELCRO BUNDLE TIE, 500mm LONG (NOT SHOWN)
9	1	133-5017	COVER, FLEX PLI GTR (NOT SHOWN)
8	1	133-5016	COVER, OUTER, TIBIA (NOT SHOWN)
7	1	133-5015	COVER, INNER, TIBIA (NOT SHOWN)
6	1	133-5014	COVER, OUTER, FEMUR (NOT SHOWN)
5	1	133-5013	COVER, INNER, FEMUR (NOT SHOWN)
4	1	133-5020	BUFFER SHEET ASSEMBLY, LEG (NOT SHOWN)
3	1	133-5100	FEMUR ASSEMBLY, FLEX PLI
2	1	133-5500	TIBIA ASSEMBLY, FLEX PLI
1	1	133-5300	KNEE ASSEMBLY, FLEX PLI

PART LIST

UNLESS OTHERWISE SPECIFIED DIMENSIONS ARE IN MILLIMETERS
TOLERANCES ARE:
DECIMALS: ANGLES: MACHINED:
X.± 0.5 ±0.5 °
X.XX ± 0.1
X.XXX ± 0.05
ASME Y14.5M - 1994
DO NOT SCALE DRAWING

STANDARD BUILD LEVEL: NA

THIRD ANGLE PROJECTION

DRAWING COURTESY OF: HUMANETICS Innovative Solutions
FOR ADDITIONAL INFORMATION VISIT OUR WEBSITE: WWW.HUMANETICSATD.COM

APPROVALS	DATE
DRAWN B. KIMES	10-Feb-16
CHECKED ASB	
PROD. ENG ASB	

MATERIAL
HEAT TREAT.
FINISH

FLEX PLI INSTRUMENTED LEG

SIZE A1 | DWG NO. 133-5000 | REV A
SCALE 0.250 | SHEET 1 OF 1

TQC TOTAL QUALITY CHECK

NEXT ASSY	QTY	USED ON
APPLICATION		

FORMAT: SHEET-A1 REV - A DOCUMENT 1 OF 2

PRO/ENGINEER

Copyright 2016 Humanetics Innovative Solutions, Inc.