REVISIONS				
ECO/ECR#	REV.	DESCRIPTION	DATE	CHANGED BY
	B	ITEM 12 & 13 BALLOONS SWAPPED ON SHT 2	16/7/2014	MJB

These FlexPLI lower legform drawings are the property of Humanetics, publically available through the UNECE website (www.unece.org, see document GTR9-9-11), and are being provided to NHTSA under agreement for the purpose of evaluation. Except for review and comment by the public, these drawings shall not be copied or used for any other purpose.

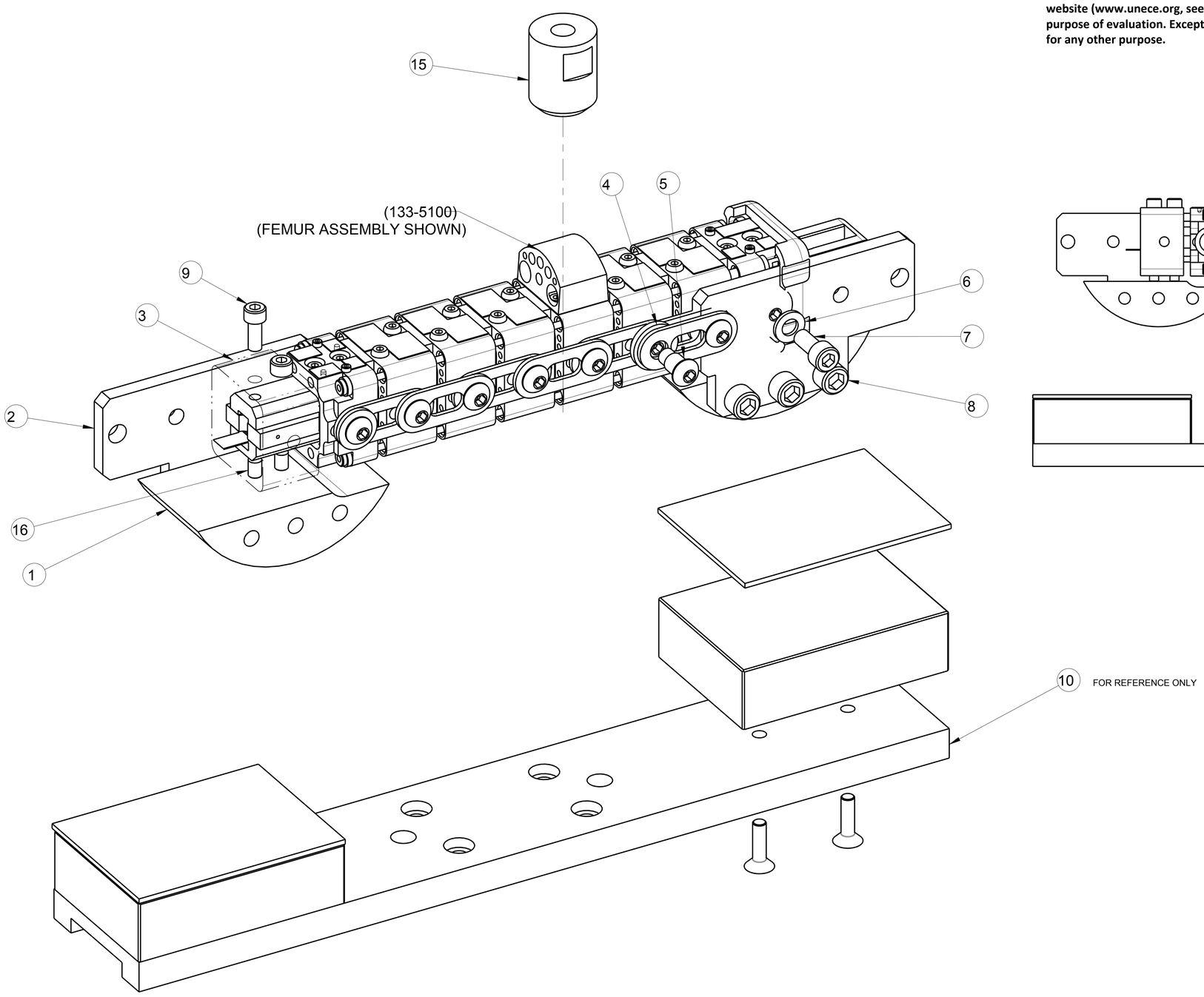

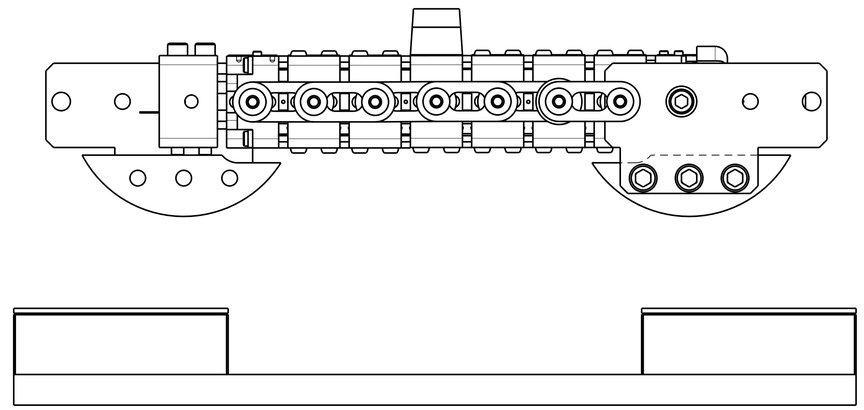

ITEM NO.	QTY	PART NO.	DESCRIPTION
16	2	5000916	SCREW, MSSFP M8 X 12
15	1	133-8102	LEG LOADING SPIGOT
14	1	133-8105	KNEE LOADING PROFILE, FLEX PLI
13	1	133-8122	KNEE CAL INSERT, FEMUR SIDE
12	1	133-8121	KNEE CAL INSERT, TIBIA SIDE
11	2	133-8126	KNEE PIVOT SIDE PLATE
10	1	133-8150	BASE ASSEMBLY (FOR REFERENCE ONLY)
9	2	5000075	SCREW, SHCS M8 X 1.25 X 20
8	6	5000441	SCREW, SHCS M12 X 1.75 X 30
7	6	5000071	SCREW, SHCS M10 X 1.5 X 22
6	2	5000105	WASHER, FLAT M10 (10.85 ID X 20 0D X 2.3 THICK)
5	4	133-8128	SHOULDER BOLT, (11.90mm)
4	2	133-8127	SPACER
3	1	133-8129	INSERT LEG PIVOT
2	2	133-8124	SIDE PLATE, LEGS
1	2	133-8125	PIVOT BASE

PART LIST

UNLESS OTHERWISE SPECIFIED
DIMENSIONS ARE IN MILLIMETERS
TOLERANCES ARE:
DECIMALS: ANGLES: MACHINED:
X ± 0.5 ±0.5 °
X.X ± 0.1
X.XX ± 0.05
ASME Y14.5M - 1994
DO NOT SCALE DRAWING

STANDARD BUILD LEVEL:
THIRD ANGLE PROJECTION

DRAWING COURTESY OF:
HUMANETICS Innovative Solutions
FOR ADDITIONAL INFORMATION VISIT OUR WEBSITE: WWW.HUMANETICSATD.COM

APPROVALS	DATE
DRAWN MJB	09-Feb-16
CHECKED	
PROD. ENG.	

MATERIAL
HEAT TREAT.
FINISH

BONE AND KNEE ASSY CAL FIXTURES

SIZE A1 | DWG NO. 133-8120 | REV B
SCALE 0.500 | SHEET 1 OF 2

TQC TOTAL QUALITY CHECK

NEXT ASSY	QTY	USED ON
APPLICATION		

FORMAT: SHEET-A1 REV. A DOCUMENT 1 OF 2

PRO/ENGINEER

Copyright 2016 Humanetics Innovative Solutions, Inc.