REVISIONS				
ECO/ECR#	REV.	DESCRIPTION	DATE	CHANGED BY
	B			

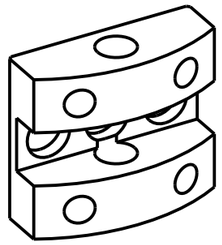

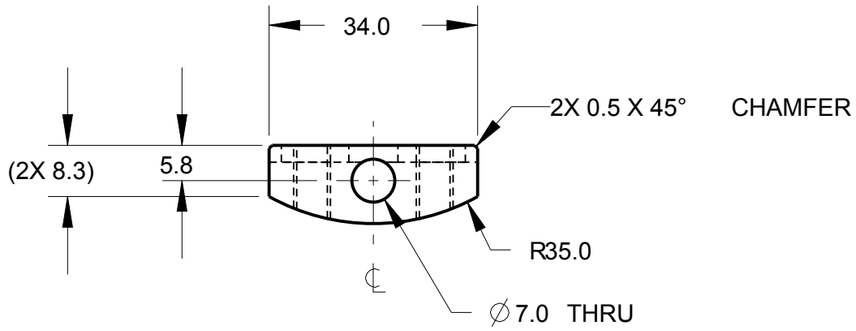

These FlexPLI lower legform drawings are the property of Humanetics, publically available through the UNECE website (www.unece.org, see document GTR9-9-11), and are being provided to NHTSA under agreement for the purpose of evaluation. Except for review and comment by the public, these drawings shall not be copied or used for any other purpose.

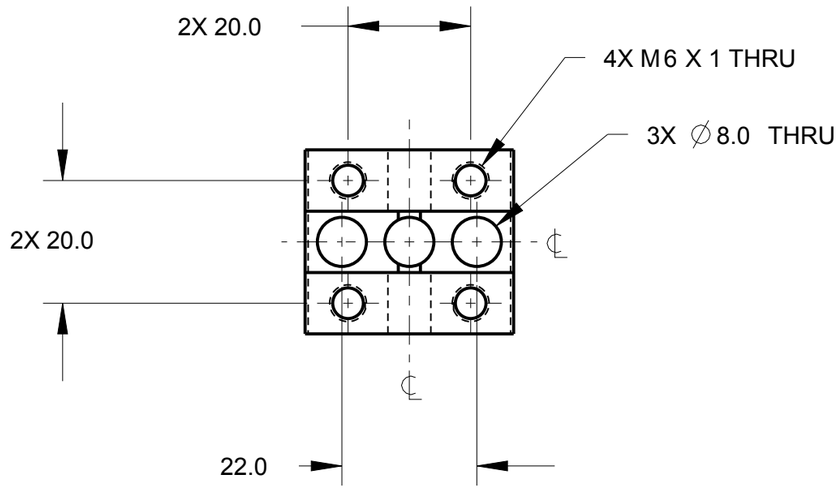

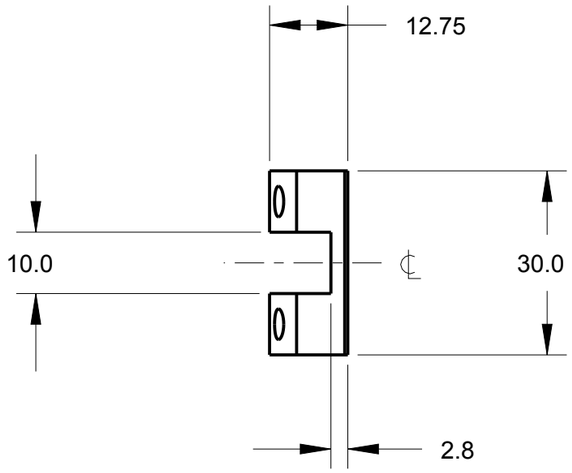

NOTES:

1. MATERIAL: MAGNESIUM/ALUMINUM ALLOY AZ31
2. FINISH PARTS WITH SUITABLE PROTECTIVE COATING.

ITEM NO.	QTY	PART NO.	DESCRIPTION

PART LIST

133-5100	5	133-5000
133-5500	7	133-5000
NEXT ASSEMBLY	QTY	USED ON

APPLICATION

UNLESS OTHERWISE SPECIFIED
DIMENSIONS ARE IN MILLIMETERS
TOLERANCES ARE:
DECIMALS: ANGLES: MACHINED:
X ± 0.5 ±0.5 °
X.X ± 0.1
X.XX ± 0.05
ASME Y14.5M - 1994
1.6
DO NOT SCALE DRAWING

STANDARD BUILD LEVEL: N/A

THIRD ANGLE PROJECTION

	APPROVALS	DATE
MATERIAL SEE NOTES	DRAWN MJB	09-Feb-16
HEAT TREAT	CHECKED	
FINISH SEE NOTES	PROD. ENG.	

DRAWING COURTESY OF:

HUMANETICS Innovative Solutions

FOR ADDITIONAL INFORMATION VISIT OUR WEBSITE: WWW.HUMANETICSATD.COM

SPACER, BONE CONTACT, THICK

SIZE	DWG NO.	REV
A3	133-5505	B

SCALE 1.000 SHEET 1 OF 1

FORMAT: SHEET-A3 REV.: A DOCUMENT 1 OF 2

Copyright 2016 Humanetics Innovative Solutions, Inc.

PRO/ENGINEER