REVISIONS				
ECO/ECR#	REV.	DESCRIPTION	DATE	CHANGED BY
	A			

PART NO.	CABLE LENGTH "XX" (mm)	SENSOR LOCATION
61-301-05-01-00	160	TIBIA KNEE BLOCK

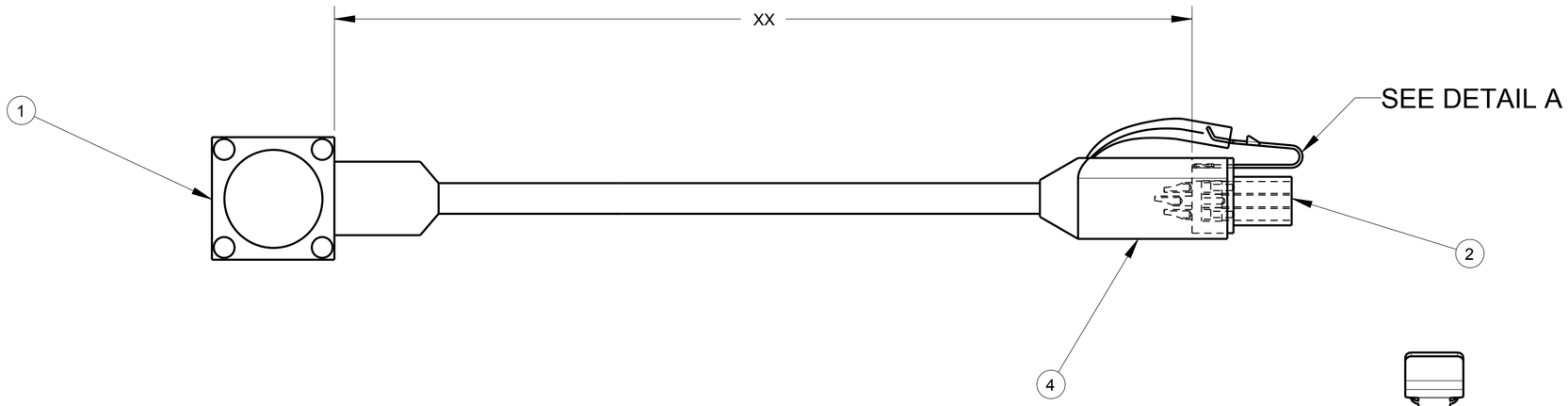

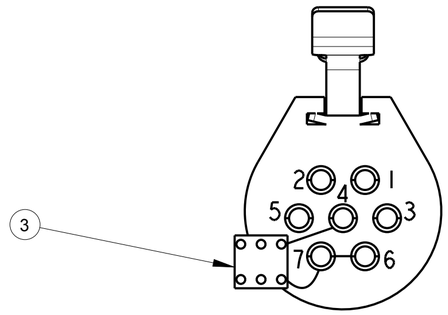

CONNECTOR DETAILS
VIEW ON SOLDER PINS

PIN	FUNCTION
1	+SIG
2	-SIG
3	+EXC
4	ID
5	-EXC
6	SHIELD ID RET
7	SHIELD ID RET

These FlexPLI lower legform drawings are the property of Humanetics, publically available through the UNECE website (www.unece.org, see document GTR9-9-11), and are being provided to NHTSA under agreement for the purpose of evaluation. Except for review and comment by the public, these drawings shall not be copied or used for any other purpose.

ITEM NO.	QTY	PART NO.	DESCRIPTION
4	1	734-2007	BACKSHELL, 7 PIN CIRCULAR MALE W/LATCH
3	1	6002366	ID CHIP 1K DS2431X CHIP SCALE
2	1	6002635	CONNECTOR, 7 PIN CIRCULAR MALE W/LATCH
1	1	IK-120	ACCELEROMETER, KYOWA (#ASE-A-500)

PART LIST

UNLESS OTHERWISE SPECIFIED DIMENSIONS ARE IN MILLIMETERS
TOLERANCES ARE:
DECIMALS: ANGLES: MACHINED:
X.± 0.5 ±0.5 ° 1.6
X.X.± 0.1
X.XX ± 0.05
ASME Y14.5M - 1994
DO NOT SCALE DRAWING

STANDARD BUILD LEVEL: NA
THIRD ANGLE PROJECTION

DRAWING COURTESY OF:
HUMANETICS Innovative Solutions
FOR ADDITIONAL INFORMATION VISIT OUR WEBSITE: WWW.HUMANETICSATD.COM

APPROVALS	DATE
DRAWN J. MCINNIS	10-Feb-16
CHECKED	
PROD. ENG.	

MATERIAL
HEAT TREAT.
FINISH

ACCEL ASSEMBLY, ASE-A-500

SIZE A2 | DWG NO. 61-301-05-00-00 | REV A
SCALE 3.000 | SHEET 1 OF 1

TQC
TOTAL QUALITY CHECK

NEXT ASSEMBLY	QTY	USED ON
APPLICATION		

FORMAT: SHEET-A2 REV - A DOCUMENT 1 OF 2

Copyright 2016 Humanetics Innovative Solutions, Inc.

PRO/ENGINEER