REVISIONS				
ECO/ECR#	REV.	DESCRIPTION	DATE	CHANGED BY
	A			

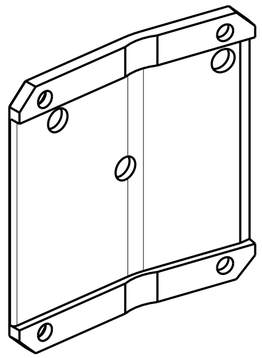

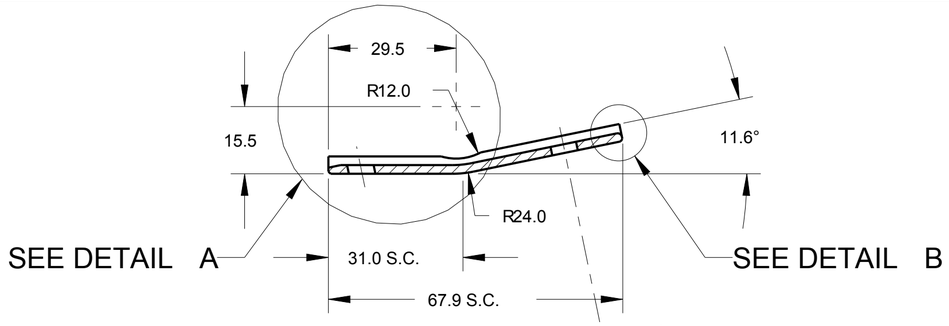

SECTION A-A

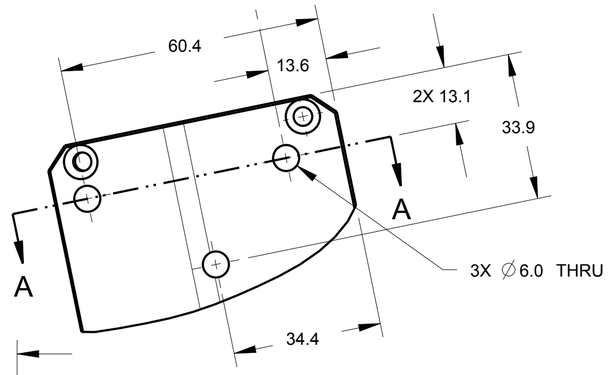

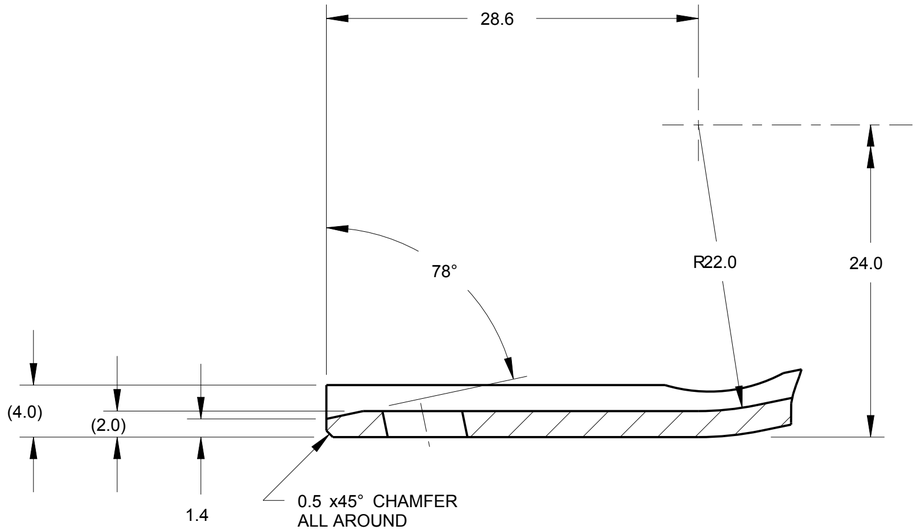

DETAIL A
SCALE 3.000

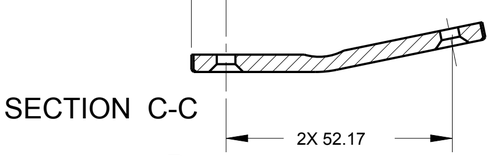

SECTION C-C

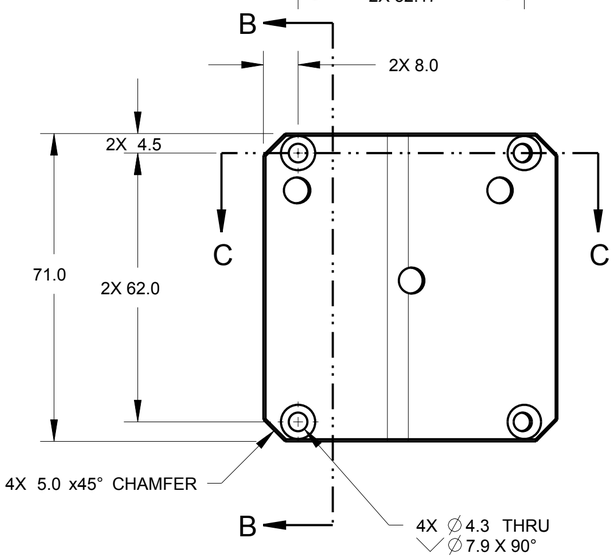

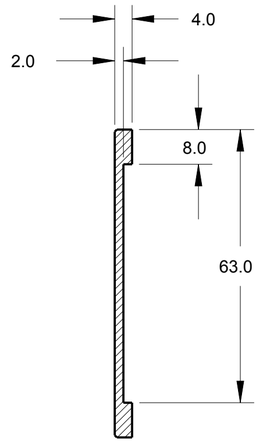

SECTION B-B

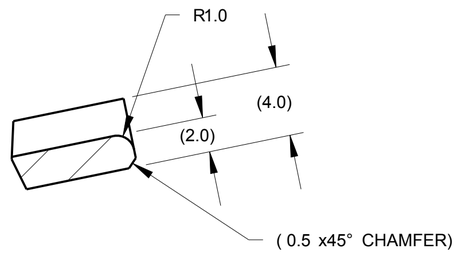

DETAIL B
SCALE 4.000

These FlexPLI lower legform drawings are the property of Humanetics, publically available through the UNECE website (www.unece.org, see document GTR9-9-11), and are being provided to NHTSA under agreement for the purpose of evaluation. Except for review and comment by the public, these drawings shall not be copied or used for any other purpose.

ITEM NO.	QTY	PART NO.	DESCRIPTION

PART LIST

UNLESS OTHERWISE SPECIFIED DIMENSIONS ARE IN MILLIMETERS
TOLERANCES ARE:
DECIMALS: ANGLES: MACHINED:
X.± 0.5 ±0.5 ° 1.6
X.X.± 0.1
X.XX.± 0.05
ASME Y14.5M - 1994
DO NOT SCALE DRAWING

STANDARD BUILD LEVEL: NA
THIRD ANGLE PROJECTION

DRAWING COURTESY OF:
HUMANETICS Innovative Solutions
FOR ADDITIONAL INFORMATION VISIT OUR WEBSITE: WWW.HUMANETICSATD.COM

APPROVALS	DATE
DRAWN MJB	09-Feb-16
CHECKED	
PROD. ENG.	

MATERIAL 6061-T6 ALUMINUM
HEAT TREAT.
FINISH CLEAR ANODIZE

COVER, KNEE, TIBIA LEFT SIDE

SIZE A2 | DWG NO. 133-5314 | REV A
SCALE 1.000 | SHEET 1 OF 1

TQC TOTAL QUALITY CHECK			
	133-5300	1	133-5000
	NEXT ASSEMBLY	QTY	USED ON
	APPLICATION		

FORMAT: SHEET-A2 REV - A DOCUMENT 1 OF 2

Copyright 2016 Humanetics Innovative Solutions, Inc.

PRO/ENGINEER