REVISIONS				
ECO/ECR#	REV.	DESCRIPTION	DATE	CHANGED BY
	A			

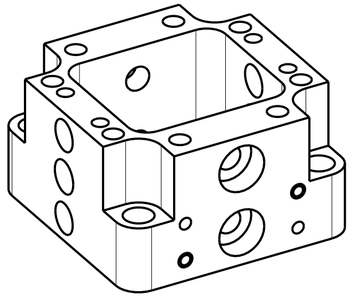

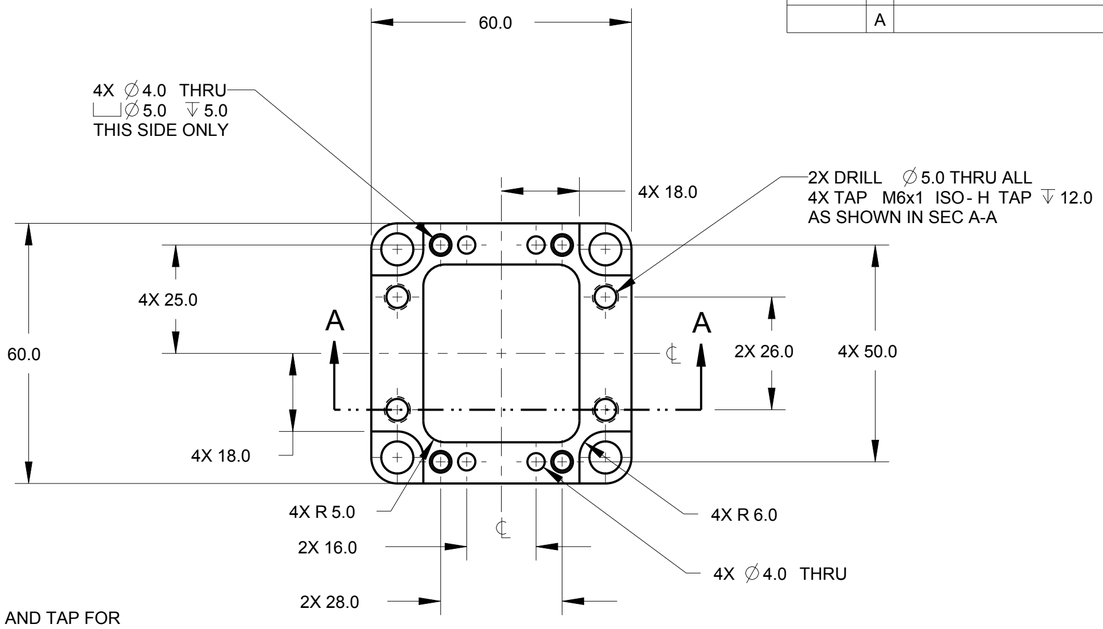

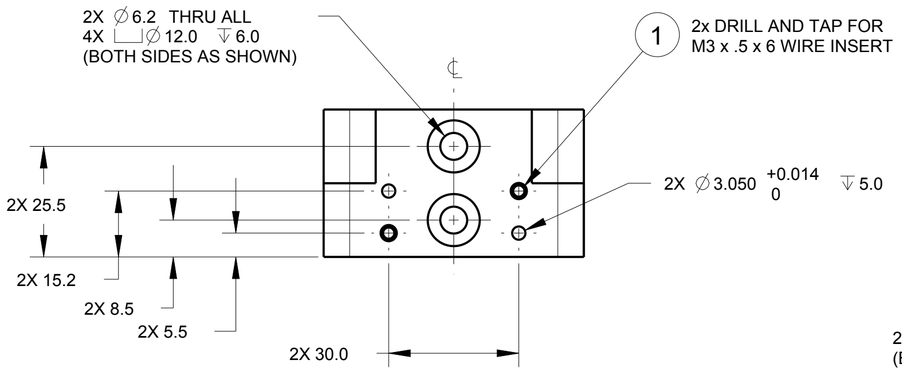

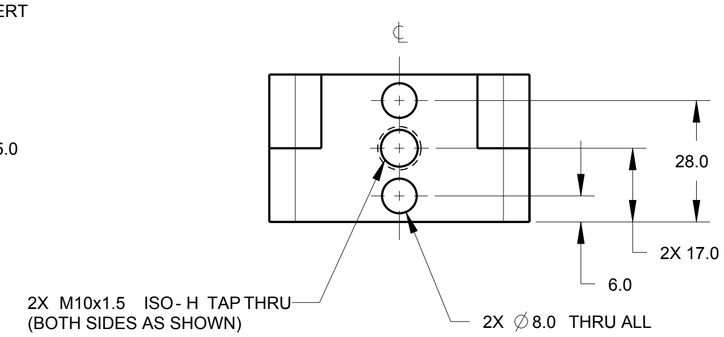

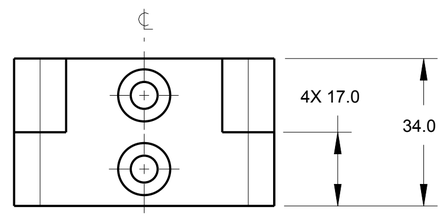

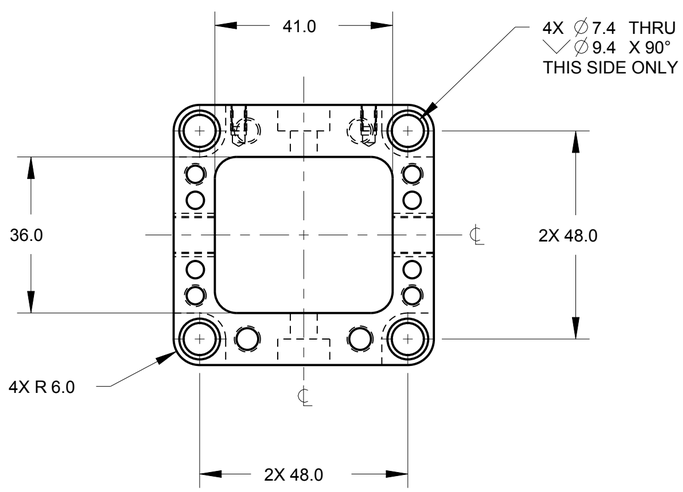

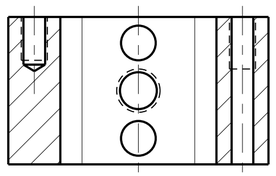

SECTION A-A

These FlexPLI lower legform drawings are the property of Humanetics, publically available through the UNECE website (www.unece.org, see document GTR9-9-11), and are being provided to NHTSA under agreement for the purpose of evaluation. Except for review and comment by the public, these drawings shall not be copied or used for any other purpose.

ITEM NO.	QTY	PART NO.	DESCRIPTION
2	2	5000333	WIRE INSERT M3 X .5 X 6

PART LIST

UNLESS OTHERWISE SPECIFIED DIMENSIONS ARE IN MILLIMETERS
TOLERANCES ARE:
DECIMALS: X ± 0.5 X.X ± 0.1 X.XX ± 0.05
ANGLES: ±0.5 °
MACHINED: 1.6
ASME Y14.5M - 1994

DO NOT SCALE DRAWING

STANDARD BUILD LEVEL: NA

THIRD ANGLE PROJECTION

DRAWING COURTESY OF:
HUMANETICS Innovative Solutions
FOR ADDITIONAL INFORMATION VISIT OUR WEBSITE: WWW.HUMANETICSATD.COM

APPROVALS	DATE
DRAWN B. KIMES	08-Feb-16
CHECKED	
PROD. ENG.	

MATERIAL 7075-T6 ALUMINUM
HEAT TREAT.
FINISH CLEAR ANODIZE

SEGMENT TOP, FEMUR

SIZE A2 | DWG NO. 133-5108 | REV A
SCALE 1.000 | SHEET 1 OF 1

FORMAT: SHEET-A2 REV.: A DOCUMENT 1 OF 2

TQC TOTAL QUALITY CHECK

NEXT ASSEMBLY	QTY	USED ON
133-5100	1	133-5000

APPLICATION

Copyright 2016 Humanetics Innovative Solutions, Inc.

PRO/ENGINEER