REVISIONS				
ECO/ECR#	REV.	DESCRIPTION	DATE	CHANGED BY
	B	IN TITLE BLOCK CLOSEST WAS CLOSES	16/7/2016	MJB

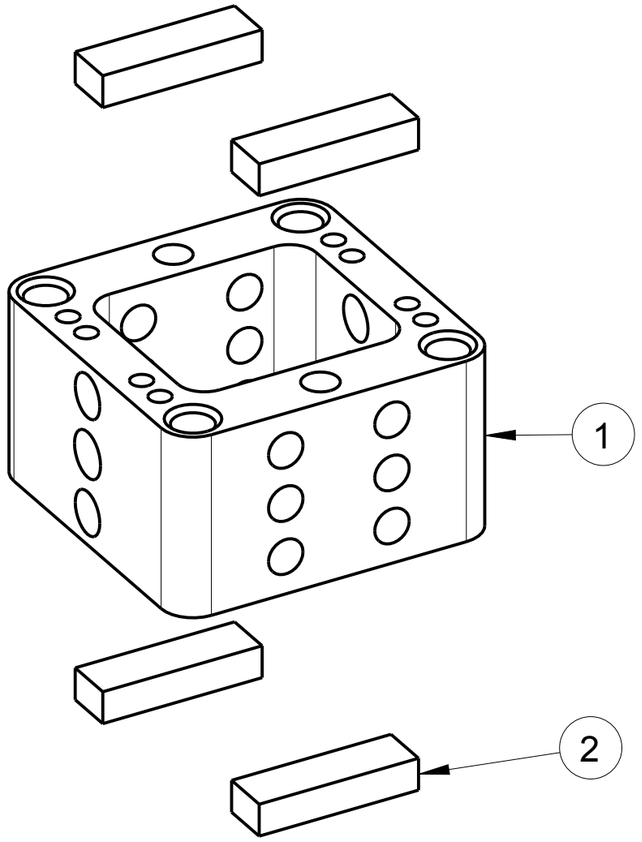

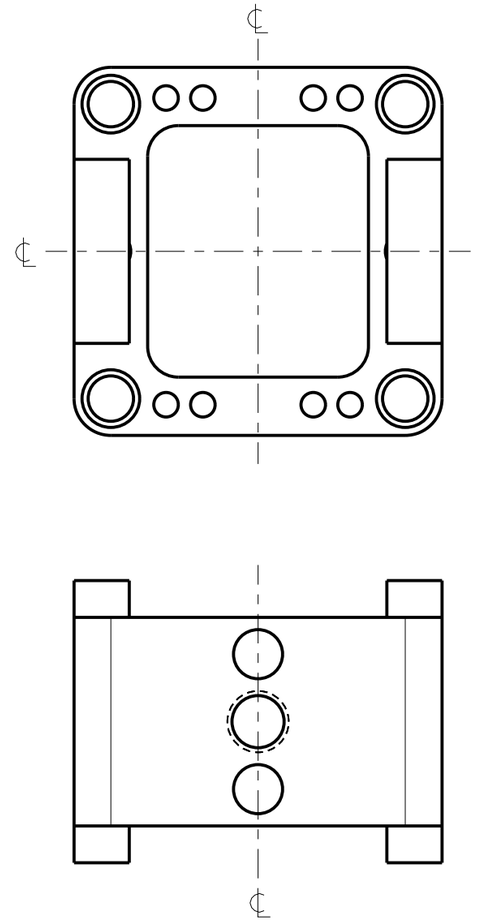

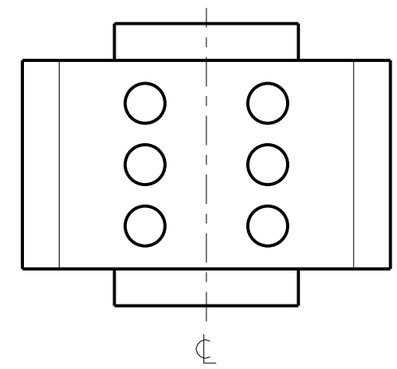

These FlexPLI lower legform drawings are the property of Humanetics, publically available through the UNECE website (www.unece.org, see document GTR9-9-11), and are being provided to NHTSA under agreement for the purpose of evaluation. Except for review and comment by the public, these drawings shall not be copied or used for any other purpose.

NOTES:
1. BOND RUBBER BUFFERS TO SEGMENT AS SHOWN

ITEM NO.	QTY	PART NO.	DESCRIPTION
2	4	133-5512	RUBBER BUFFER
1	1	133-5513	INNER SEGMENT

PART LIST

NEXT ASSEMBLY	QTY	USED ON
133-5500	1	133-5000
133-5100	1	133-5000

APPLICATION

UNLESS OTHERWISE SPECIFIED DIMENSIONS ARE IN MILLIMETERS
TOLERANCES ARE:
DECIMALS: X ± 0.5, X.X ± 0.1, X.XX ± 0.05
ANGLES: ±0.5 °
MACHINED: 1.6
ASME Y14.5M - 1994
DO NOT SCALE DRAWING

STANDARD: BUILD LEVEL:

THIRD ANGLE PROJECTION

APPROVALS	DATE
DRAWN J. WATT	09-Feb-16
CHECKED	
PROD. ENG.	

MATERIAL
HEAT TREAT
FINISH

DRAWING COURTESY OF:
HUMANETICS Innovative Solutions
FOR ADDITIONAL INFORMATION VISIT OUR WEBSITE: WWW.HUMANETICSATD.COM

INNER SEGMENT ASSY CLOSEST TO KNEE

SIZE A3 | DWG NO. 133-5535 | REV B
SCALE 1.000 | SHEET 1 OF 1

FORMAT: SHEET-A3 REV.: A DOCUMENT 1 OF 2

Copyright 2016 Humanetics Innovative Solutions, Inc.

PRO/ENGINEER